A8 Warning Sign – Steep Ascent 12%, 70 cm, Class I

Class I (EGP) Road Signs | Signs compliant with SR 1848-1:2024



AT A GLANCE

- Warning sign A8 “Steep ascent 12%”, to SR 1848-1:2024.
- 70 cm triangle in 1 mm galvanised steel sheet, 2 kg.
- Class I retroreflective sheeting, 7-year service life.
- Fixings included: 2 clamps for Ø48 mm posts and 4 bolts with nuts.
- CE marked; sheeting and paint resistant to UV and weathering.

Product code	**A8-12**
Category	**Metal Road Signs**
Weight	**2 kg**
Compliance	**Class I (EGP) Road Signs**
Compliance	**Signs compliant with SR 1848-1:2024**

This product on attotrafic.ro
https://attotrafic.ro/en_US/products/a8-urcare-cu-inclinare-mare-12-70-cm-clasa-i

Technical specifications

SR 1848-1 code	A8
Name in the standard	Steep ascent 12%
Type	Warning road sign
Shape and colours	Equilateral triangle, red border, white background, black symbol
Size	70 cm side
Format (SR 1848-2)	Normal
Red border	60 mm
Legend	12%, 56 mm figures
Material	Galvanised steel sheet, 1 mm
Construction	Rounded corners, pressed edges, no sharp edges

Painting	Electrostatic, UV-resistant paint
Retroreflective sheeting	Class I (RA1), UV-resistant
Retroreflection (white, 0.2°/5°)	70 cd/(lx·m²)
Sheeting service life	7 years
Weight	2 kg
Fixings included	2 clamps, 4 bolts with nuts
Post diameter	Ø48 mm (Ø60 mm on request)
Standards	SR EN 12899-1:2007, SR 1848-1:2024, SR 1848-2:2011, SR 1848-3:2011
Marking	CE

Description

The A8 signals a steep climb, here 12%. Heavy vehicles go up slowly, so drivers behind them should expect a queue, and loaded vehicles pick their gear before the climb.

When class I is used

The sign has class I (RA1) retroreflective sheeting: 70 cd/(lx·m²) for white and a 7-year service life. It is the economical choice for places without many light sources, such as local, minor and private roads or streets without strong lighting. Where there is street lighting, shop windows or advertising, SR 1848-2 requires prismatic class 2 or 3 sheeting, which stands out better against a lit background.

Where it goes, under SR 1848-1:2024

It goes at the start of a climb of at least 7%. The figure is set the same way as on the A7: the actual maximum gradient of the climb, rounded up to a whole number. The 12% sign is used when the rounded maximum is 12%.

Technical data

- equilateral triangle with a 70 cm side (normal format, SR 1848-2), 60 mm red border, white background, black symbol;
- "12%" legend, with 56 mm figures;
- 1 mm galvanised steel sheet, with rounded corners and pressed edges, no sharp edges;
- electrostatically painted with UV-resistant paint;
- class I retroreflective sheeting (RA1), resistant to UV and weathering, with a 7-year service life;
- weight: 2 kg;
- fixings included: 2 clamps for Ø48 mm posts and 4 bolts with nuts;
- CE marked; compliant with SR EN 12899-1:2007, SR 1848-1:2024, SR 1848-2:2011 and SR 1848-3:2011.

Mounting and size

The sign comes with 2 clamps for Ø48 mm posts and 4 bolts with nuts. Clamps for Ø60 mm posts are available on request. It goes on the right-hand side of the road, with its bottom edge 1.50–2.50 m up and its inner edge 0.50–2.0 m from the platform; on roads with two or more lanes each way, repeating it on the left is recommended. No more than three signs go on the same post.

The post is ordered separately. For a fixed installation in a concrete foundation: the galvanised Ø48 mm post, 300 cm. For temporary use, with no foundation: the Ø48 mm tripod post, 120 cm. On concrete or paving, where you cannot dig: the Ø60 mm flange post, 300 cm, bolted down; for it, ask for the Ø60 mm clamps when you order.

The 70 cm triangle is the normal format in SR 1848-2, meant for county and local roads, streets and private roads open to public traffic. National roads call for large 90 cm signs, and motorways for very large 120 cm ones.

Drawings and details · 1/3

A8 – Urcare cu înclinare mare

Steep ascent

70 cm · dimensiunile feței indicatorului

70 cm · sign face dimensions

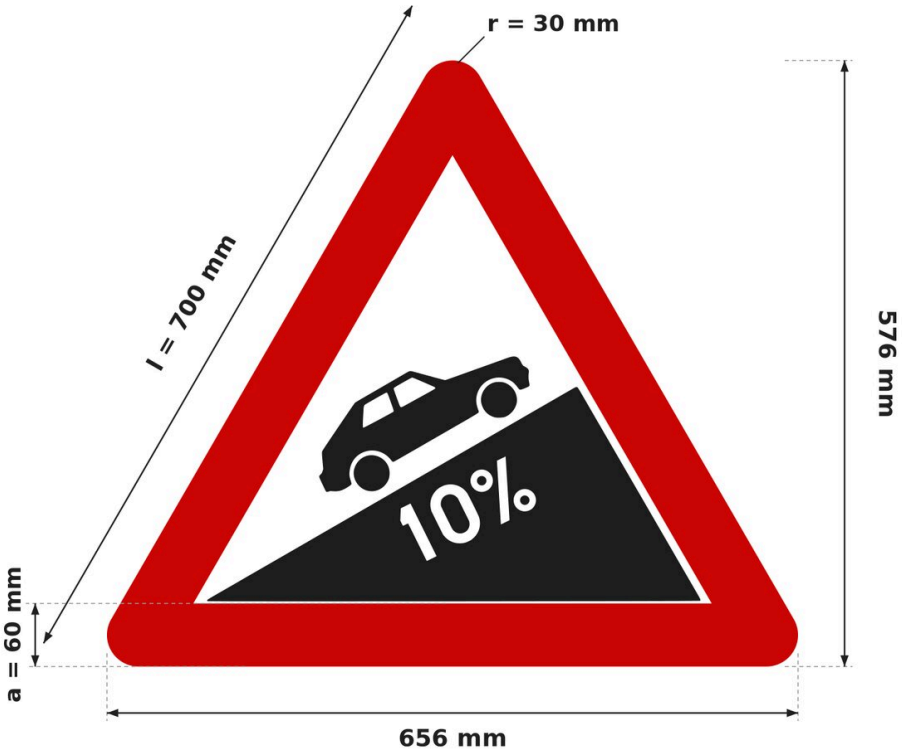

Dimensiuni SR 1848-2 (mm)
SR 1848-2 dimensions (mm)

60 cm
l = 600 · a = 50 · r = 15 · h = 50
drumuri vicinale cu trafic redus
low-traffic local access roads

70 cm
l = 700 · a = 60 · r = 30 · h = 56
drumuri județene, comunale, străzi
county and communal roads, streets

90 cm
l = 900 · a = 75 · r = 30 · h = 70
drumuri naționale
national roads

120 cm
l = 1200 · a = 100 · r = 30 · h = 100
autostrăzi
motorways

Fond alb, chenar roșu; cotele sunt ale feței retroreflectorizante.
White background, red border; dimensions of the retroreflective face.

Panoul suport depășește fața cu 5–10 mm (SR 1848-2, 6.1).
The backing panel is 5–10 mm larger than the face (SR 1848-2, 6.1).

l = latura triunghiului cu colțuri ascuțite; colțurile se racordează cu raza r.
l = side of the sharp-cornered triangle; corners are rounded with radius r.

Formatul se alege după categoria drumului (SR 1848-2, 5.2); colțuri r = 15 mm la formatul mic, r = 30 mm la celelalte.
The format follows the road category (SR 1848-2, 5.2); corners r = 15 mm on the small format, r = 30 mm on the others.

Panta: 6–20 %; cifrele au tip „normal”, h = 50 / 56 / 70 / 100 mm (format mic / normal / mare / foarte mare).
Gradient 6–20 %; digits in the normal type, h = 50 / 56 / 70 / 100 mm (small / normal / large / very large format).

Scriere SR 1848-3: tip „normal”, H = 56 mm.
SR 1848-3 lettering: normal type, H = 56 mm.

Sursa: SR 1848-2:2011, tab. 2.
Source: SR 1848-2:2011, table 2.

Drawings and details · 2/3

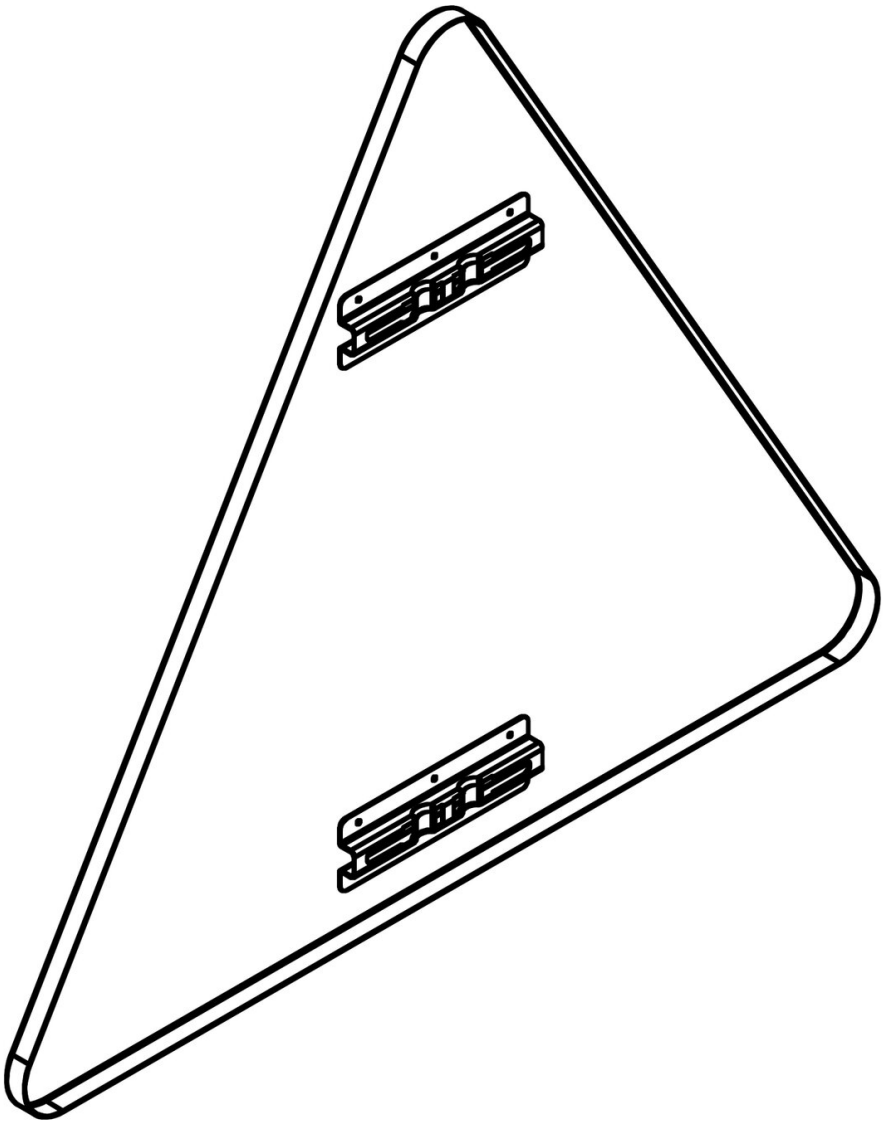

Drawings and details · 3/3

Prindere cu canal și colier, stâlp Ø48 mm

Channel and clamp fixing, Ø48 mm post

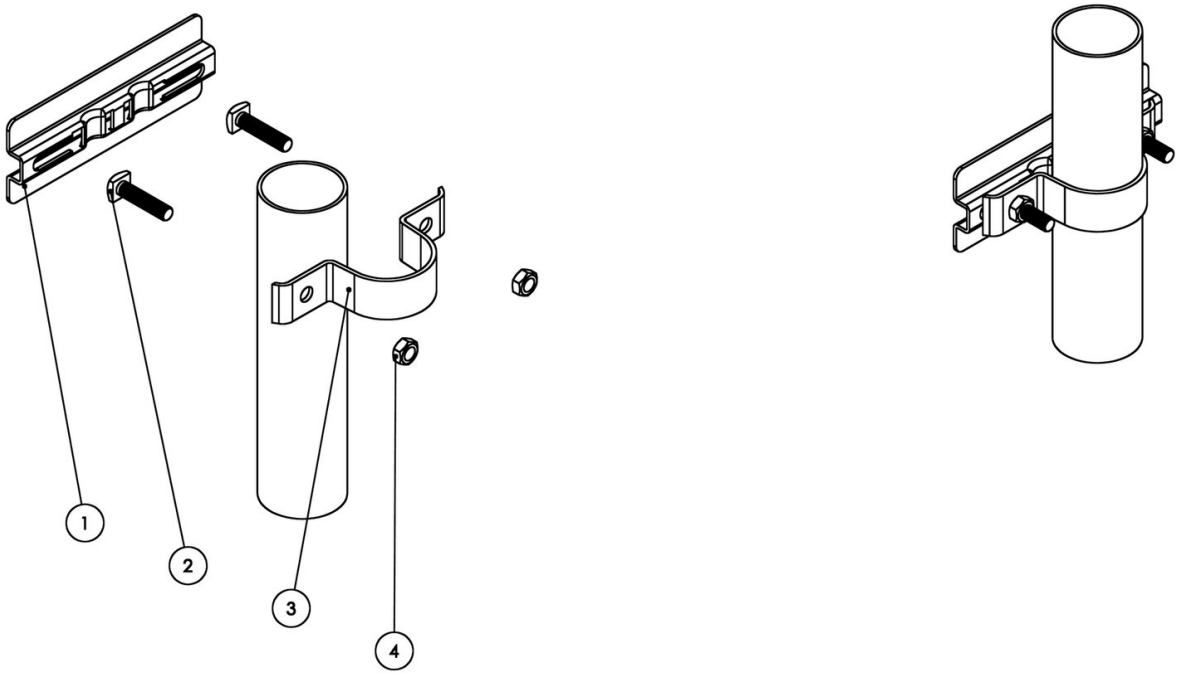

1 Canal de prindere din aluminiu (pe spatele panoului)
Aluminium fixing channel (on the back of the panel)

2 Șurub M8 × 35 cu cap pătrat, zincat (2 buc.)
M8 × 35 square-head bolt, galvanised (2 pcs)

3 Colier Ø48 mm din tablă zincată
Ø48 mm clamp, galvanised steel

4 Piuliță M8 zincată (2 buc.)
M8 nut, galvanised (2 pcs)

Set pentru un punct de prindere. Pentru stâlp Ø60 mm, colierele se livrează la cerere.
Set for one fixing point. Clamps for Ø60 mm posts are available on request.