C17 Prohibition Sign – No Vehicles Higher than 2.6 m, Ø60 cm, Class I

Class I (EGP) Road Signs | Signs compliant with SR 1848-1:2024



AT A GLANCE

- Prohibition or restriction sign C17 "No vehicles higher than 2.6 m", to SR 1848-1:2024.
- 60 cm diameter disc, normal format, in 1 mm galvanised steel sheet.
- Class I retroreflective sheeting, 7-year service life.
- Fixings included: 2 clamps for Ø48 mm posts and 4 bolts with nuts.
- CE marked; sheeting and paint resistant to UV and weathering.

Product code	**C17-2.6**
Category	**Metal Road Signs**
Weight	**3 kg**
Compliance	**Class I (EGP) Road Signs**
Compliance	**Signs compliant with SR 1848-1:2024**

This product on attotrafic.ro
https://attotrafic.ro/en_US/products/c17-accesul-interzis-vehiculelor-mai-inalte-de-2-6-m-o60-cm-clasa-i

Technical specifications

SR 1848-1 code	C17
Name in the standard	No vehicles higher than 2.6 m
Type	Prohibition or restriction road sign
Shape and colours	White disc with a red border, with the value 2.6 m between two black vertical arrowheads
Value shown	2.6 m
Size	60 cm diameter
Format (SR 1848-2)	Normal

Red border	60 mm
Digit height	260 mm large digit, 100 mm small digit
Material	Galvanised steel sheet, 1 mm
Construction	Pressed edges, no sharp edges
Painting	Electrostatic, UV-resistant paint
Retroreflective sheeting	Class I (RA1), UV-resistant
Retroreflection (white, 0.2°/5°)	70 cd/(lx·m²)
Sheeting service life	7 years
Weight	3 kg
Fixings included	2 clamps, 4 bolts with nuts
Post diameter	Ø48 mm (Ø60 mm on request)
Standards	SR EN 12899-1:2007, SR 1848-1:2024, SR 1848-2:2011, SR 1848-3:2011
Marking	CE

Description

The C17 stops the driver of a vehicle taller than 2.6 m before reaching a bridge, underpass or portal it will not fit under. The value sits between two black vertical arrowheads.

When class I is used

The sign has class I (RA1) retroreflective sheeting: 70 cd/(lx·m²) for white and a 7-year service life. It is the economical choice for places without many light sources, such as local, minor and private roads or streets without strong lighting. Where there is street lighting, shop windows or advertising, SR 1848-2 requires prismatic class 2 or 3 sheeting, which stands out better against a lit background.

Where it goes, under SR 1848-1:2024

It goes at both ends of bridges, underpasses, tunnels, portals and other places where the 5.50 m clearance height is not available, and at the junction leading to an alternative route; there, as with the C16, the P4 panel with the distance is added.

As a general rule for prohibition and restriction signs, it goes right after the junction before the restricted section, so the drivers concerned can take another route without having to turn back. The sign is repeated after every junction on the section, for drivers joining from side roads, and if the restriction starts further on, the P4 additional panel with the distance goes under it.

Technical data

- 60 cm diameter disc (normal format, SR 1848-2): white with a red border, with the value 2.6 m between two black vertical arrowheads;
- 1 mm galvanised steel sheet, with pressed edges, no sharp edges;
- electrostatically painted with UV-resistant paint;
- class I retroreflective sheeting (RA1), resistant to UV and weathering, with a 7-year service life;
- weight: 3 kg;
- fixings included: 2 clamps for Ø48 mm posts and 4 bolts with nuts;
- CE marked; compliant with SR EN 12899-1:2007, SR 1848-1:2024, SR 1848-2:2011 and SR 1848-3:2011.

Mounting and size

Fixings for the post are included: 2 clamps for Ø48 mm posts and 4 bolts with nuts; clamps for Ø60 mm posts are available on request. The bottom edge of the sign goes 1.50–2.50 m above the road or kerb, and the edge nearest the road 0.50–2.0 m from the road platform. The sign must be visible from at least 50 m in built-up areas and 100 m outside them.

The post is ordered separately. For a fixed installation in a concrete foundation: the galvanised Ø48 mm post, 300 cm. For temporary use, with no foundation: the Ø48 mm tripod post, 120 cm. On concrete or paving, where you cannot dig: the Ø60 mm flange post, 300 cm, bolted down; for it, ask for the Ø60 mm clamps when you order.

The 60 cm diameter is the normal format in SR 1848-2, for county and local roads, streets and private roads open to public traffic. National roads call for the large Ø80 cm format and motorways for the very large Ø100 cm one; the standard forbids using a smaller format than the road category requires.

Drawings and details · 1/3

C17 – Accesul interzis vehiculelor cu înălțimea mai mare de ... m

No vehicles higher than ... m

Ø60 cm · dimensiunile feței indicatorului

Ø60 cm · sign face dimensions

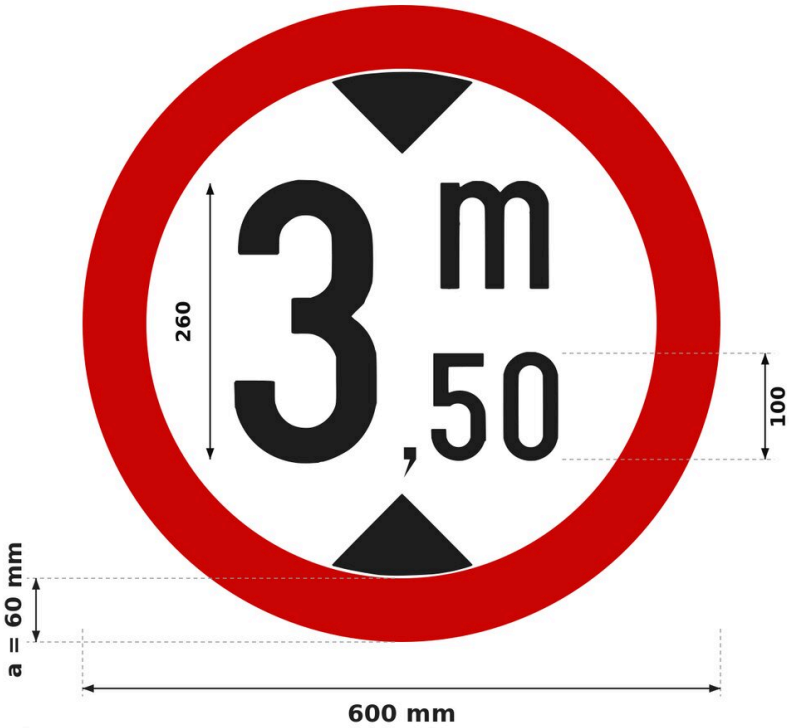

Dimensiuni SR 1848-2 (mm)
SR 1848-2 dimensions (mm)

Ø40 cm
D = 400 · a = 50
drumuri vicinale cu trafic redus
low-traffic local access roads

Ø60 cm
D = 600 · a = 60
drumuri județene, comunale, străzi
county and communal roads, streets

Ø80 cm
D = 800 · a = 80
drumuri naționale
national roads

Ø100 cm
D = 1000 · a = 100
autostrăzi
motorways

Fond alb, chenar roșu a; cotele sunt ale feței retroreflectorizante.
White background, red border a; dimensions of the retroreflective face.

Panoul suport depășește fața cu 5–10 mm (SR 1848-2, 6.1).
The backing panel is 5–10 mm larger than the face (SR 1848-2, 6.1).

Formatul se alege după categoria drumului (SR 1848-2, 5.2).
The format follows the road category (SR 1848-2, 5.2).

Cifrele și unitățile: scriere tip „îngust” (ca în figurile SR 1848-1:2024).
Digits and units: narrow type (as in the SR 1848-1:2024 figures).

Pe Ø600: cifra mare / cifra mică / unitatea = 260 / 100 / 140 mm (tab. 5).
On Ø600: big digit / small digit / unit = 260 / 100 / 140 mm (table 5).

Scriere SR 1848-3: tip „îngust”, H = 260 mm; tip „îngust”, H = 100 mm; tip „îngust”, H = 140 mm.
SR 1848-3 lettering: narrow type, H = 260 mm; narrow type, H = 100 mm; narrow type, H = 140 mm.

Sursa: SR 1848-2:2011, tab. 3, tab. 4 și tab. 5.
Source: SR 1848-2:2011, table 3, table 4 and table 5.

Drawings and details · 2/3

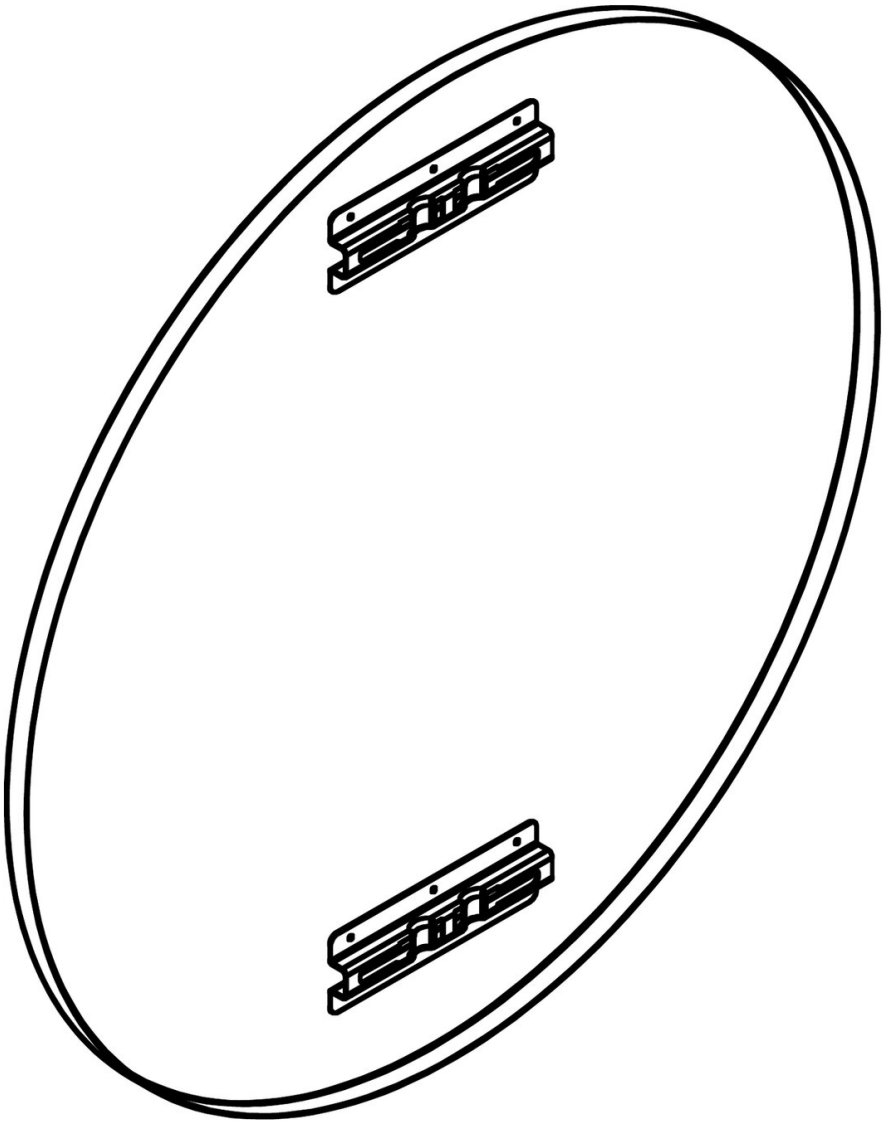

Drawings and details · 3/3

Prindere cu canal și colier, stâlp Ø48 mm

Channel and clamp fixing, Ø48 mm post

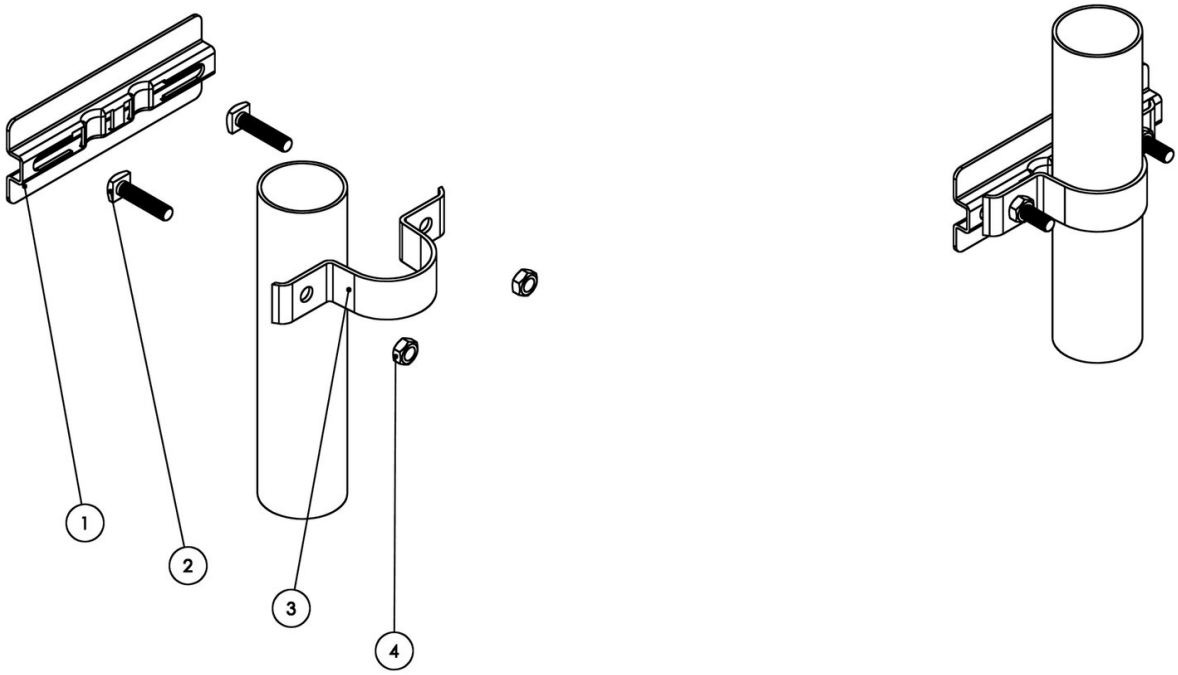

1 Canal de prindere din aluminiu (pe spatele panoului)
Aluminium fixing channel (on the back of the panel)

2 Șurub M8 × 35 cu cap pătrat, zincat (2 buc.)
M8 × 35 square-head bolt, galvanised (2 pcs)

3 Colier Ø48 mm din tablă zincată
Ø48 mm clamp, galvanised steel

4 Piuliță M8 zincată (2 buc.)
M8 nut, galvanised (2 pcs)

Set pentru un punct de prindere. Pentru stâlp Ø60 mm, colierele se livrează la cerere.
Set for one fixing point. Clamps for Ø60 mm posts are available on request.