C18 Prohibition Sign – No Vehicles over 40 t, Ø80 cm, Class II

Signs compliant with SR 1848-1:2024



AT A GLANCE

- Prohibition or restriction sign C18 “No vehicles with a maximum authorised mass exceeding 40 tonnes”, to SR 1848-1:2024.
- 80 cm diameter disc, large format, in 1 mm galvanised steel sheet.
- Class II (RA2) prismatic sheeting, guaranteed 10-year service life.
- Fixings included: 2 clamps for Ø48 mm posts and 4 bolts with nuts.
- CE marked; sheeting and paint resistant to UV and weathering.

Product code	**C18-40_II**
Category	**Metal Road Signs (Class II)**
Weight	**5.5 kg**
Compliance	**Signs compliant with SR 1848-1:2024**

This product on attotrafic.ro
https://attotrafic.ro/en_US/products/c18-accesul-interzis-vehiculelor-cu-masa-totala-peste-40-t-o80-cm-clasa-ii

Technical specifications

SR 1848-1 code	C18
Name in the standard	No vehicles with a maximum authorised mass exceeding 40 tonnes
Type	Prohibition or restriction road sign
Shape and colours	White disc with a red border and the value 40 t in black
Value shown	40 t
Size	Ø80 cm
Format (SR 1848-2)	Large
Material	Galvanised steel sheet, 1 mm

Construction	Pressed edges, no sharp edges
Painting	Electrostatic, UV-resistant paint
Retroreflective sheeting	Class II (RA2), prismatic, UV-resistant
Retroreflection (white, 0.2°/5°)	250 cd/(lx·m²)
Sheeting service life	10 years (SR 1848-2)
Fixings included	2 clamps, 4 bolts with nuts
Post diameter	Ø48 mm (Ø60 mm on request)
Standards	SR EN 12899-1:2007, SR 1848-1:2024, SR 1848-2:2011, SR 1848-3:2011
Marking	CE

Description

The C18 protects bridges and roads that cannot carry heavy vehicles: vehicles with a maximum authorised mass above 40 t may not enter. The value is shown in large black figures. This version is Ø80 cm, the large format required on national roads, with class II prismatic sheeting that can be seen from far away at night.

Why class II

Class II (RA2) prismatic sheeting returns roughly three to four times more headlight to the driver than class I sheeting, so the sign can be seen from further away at night and stays legible when viewed at an angle. SR 1848-2 requires prismatic class 2 or 3 sheeting in areas with many light sources, such as streets with public lighting, shop windows and advertising, where a class I sign gets lost in the background. Class II sheeting has a guaranteed 10-year service life, against 7 years for class I.

Where it goes, under SR 1848-1:2024

It goes at the start of the section, or at both ends of bridges, underpasses, tunnels and other places where vehicles with a maximum authorised mass above the value shown are banned, and at the junction from which the restriction can be avoided. If the restriction covers only one vehicle category, an additional panel shows it.

The general rule in SR 1848-1:2024: the sign goes right after the junction before the restricted section, so the drivers concerned can find a way round without turning back, and it is repeated after every junction on the section. Mounted over a lane, it applies to that lane only; when the restriction starts some distance on, the P4 panel shows the distance.

Technical data

- 80 cm diameter disc (large format, SR 1848-2): white with a red border and the value 40 t in black;
- 1 mm galvanised steel sheet, with pressed edges, no sharp edges;
- electrostatically painted with UV-resistant paint;
- class II (RA2) prismatic retroreflective sheeting, resistant to UV and weathering, with a guaranteed 10-year service life;
- fixings included: 2 clamps for Ø48 mm posts and 4 bolts with nuts;
- CE marked; compliant with SR EN 12899-1:2007, SR 1848-1:2024, SR 1848-2:2011 and SR 1848-3:2011.

Mounting and size

Fixings for the post are included: 2 clamps for Ø48 mm posts and 4 bolts with nuts; clamps for Ø60 mm posts are available on request. The bottom edge of the sign goes 1.50–2.50 m above the road or kerb, and the edge nearest the road 0.50–2.0 m from the road platform.

The post is ordered separately. For a fixed installation in a concrete foundation: the galvanised Ø48 mm post, 300 cm. For temporary use, with no foundation: the Ø48 mm tripod post, 120 cm. On concrete or paving, where you cannot dig: the Ø60 mm flange post, 300 cm, bolted down; for it, ask for the Ø60 mm clamps when you order.

The 80 cm diameter is the large format in SR 1848-2, required on national roads; motorways use the very large 100 cm format.

Drawings and details · 1/3

C18 – Accesul interzis vehiculelor cu masa totală maximă autorizată mai mare de ... tone

No vehicles with a maximum authorised mass exceeding ... tonnes

Ø80 cm · dimensiunile feței indicatorului

Ø80 cm · sign face dimensions

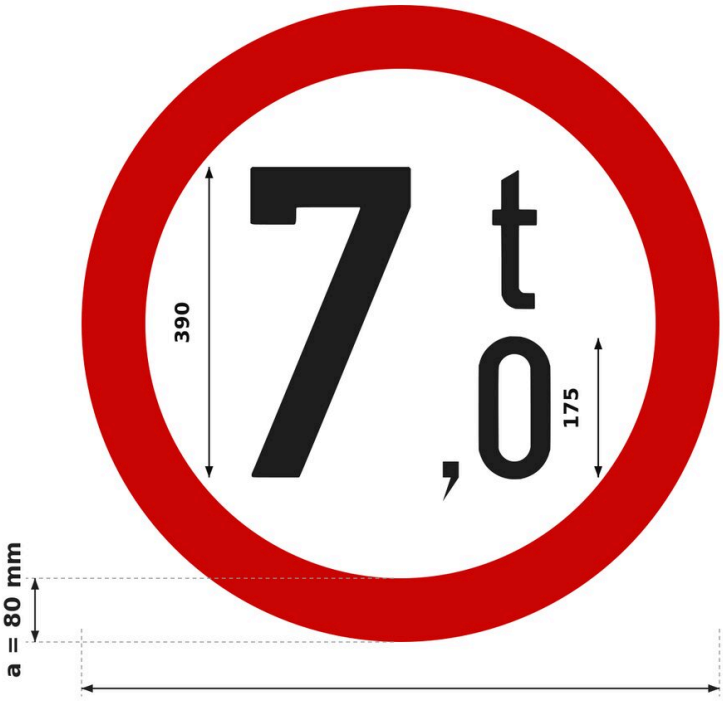

Fond alb, chenar roșu a; cotele sunt ale feței retroreflectorizante.
White background, red border a; dimensions of the retroreflective face.

Panoul suport depășește fața cu 5–10 mm (SR 1848-2, 6.1).
The backing panel is 5–10 mm larger than the face (SR 1848-2, 6.1).

Formatul se alege după categoria drumului (SR 1848-2, 5.2).
The format follows the road category (SR 1848-2, 5.2).

Cifrele și unitățile: scriere tip „îngust” (ca în figurile SR 1848-1:2024).
Digits and units: narrow type (as in the SR 1848-1:2024 figures).

Pe Ø600: cifra mare / cifra mică / unitatea = 290 / 130 / 130 mm (tab. 5).
On Ø600: big digit / small digit / unit = 290 / 130 / 130 mm (table 5).

Scriere SR 1848-3: tip „îngust”, H = 390 mm; tip „îngust”, H = 175 mm.
SR 1848-3 lettering: narrow type, H = 390 mm; narrow type, H = 175 mm.

Sursa: SR 1848-2:2011, tab. 3, tab. 4 și tab. 5.
Source: SR 1848-2:2011, table 3, table 4 and table 5.

Dimensiuni SR 1848-2 (mm)
SR 1848-2 dimensions (mm)

Ø40 cm
D = 400 · a = 50
drumuri vicinale cu trafic redus
low-traffic local access roads

Ø60 cm
D = 600 · a = 60
drumuri județene, comunale, străzi
county and communal roads, streets

Ø80 cm
D = 800 · a = 80
drumuri naționale
national roads

Ø100 cm
D = 1000 · a = 100
autostrăzi
motorways

Drawings and details · 2/3

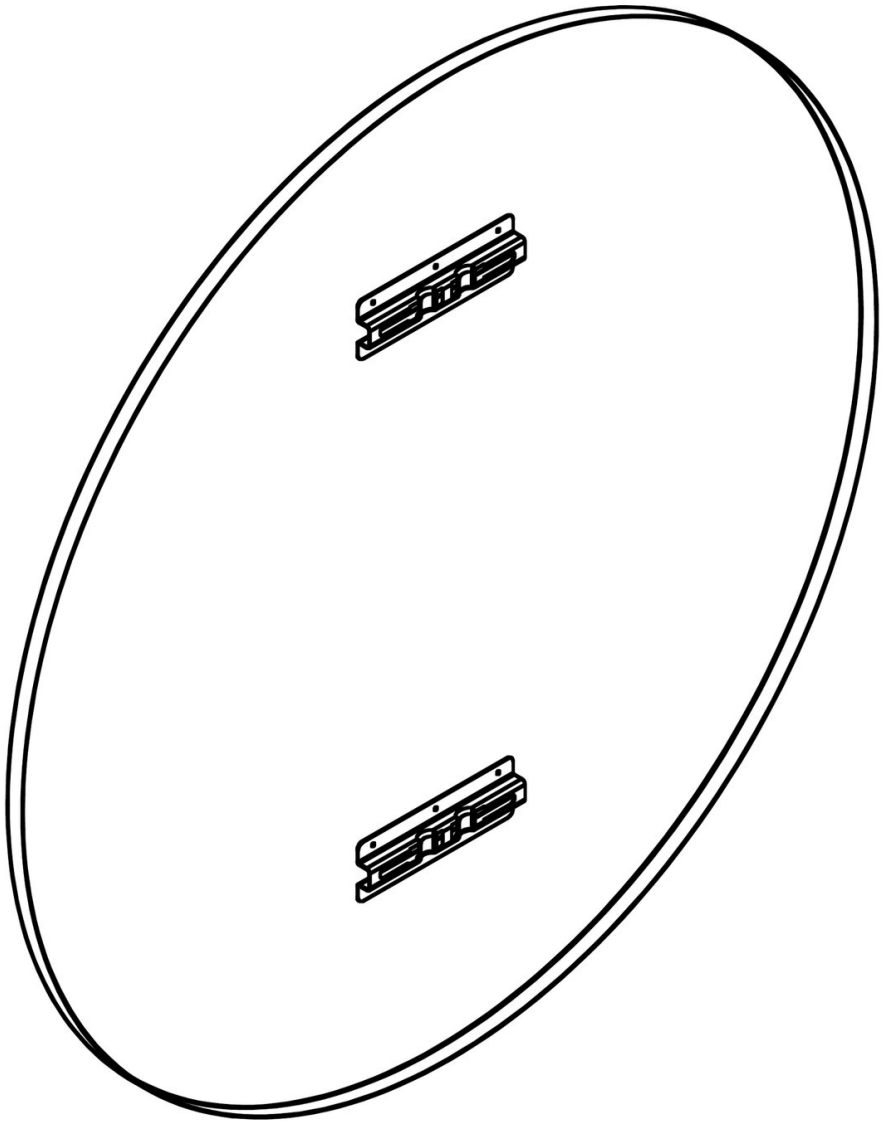

Drawings and details · 3/3

Prindere cu canal și colier, stâlp Ø48 mm

Channel and clamp fixing, Ø48 mm post

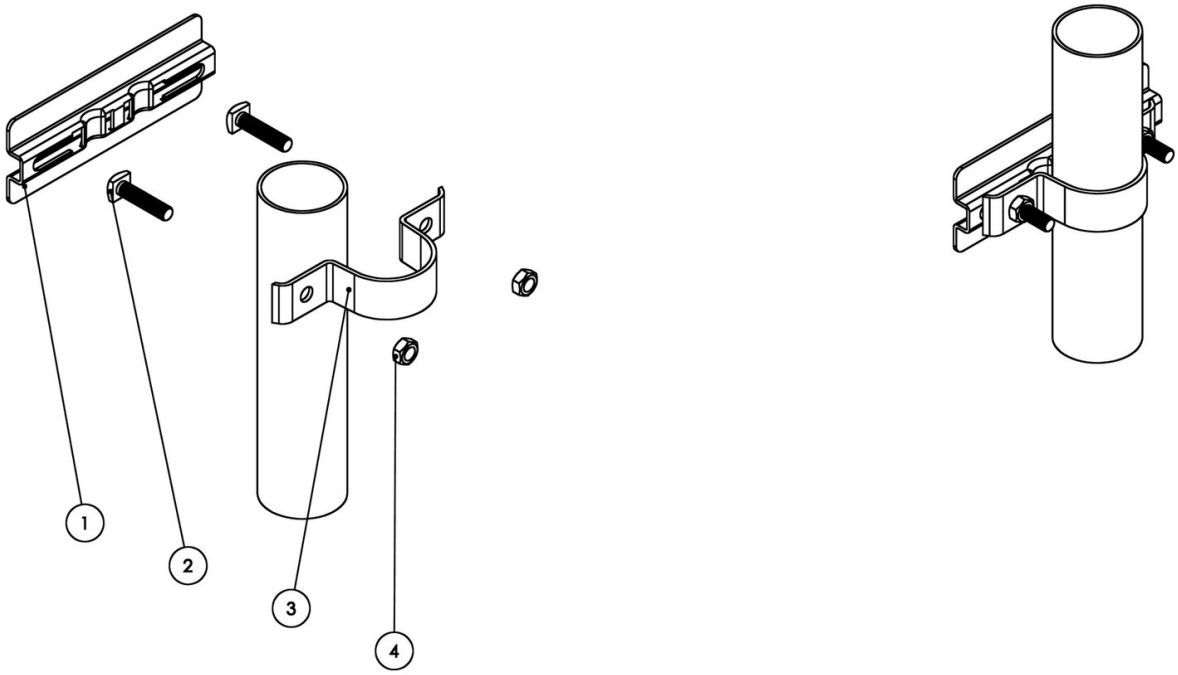

1 Canal de prindere din aluminiu (pe spatele panoului)
Aluminium fixing channel (on the back of the panel)

2 Șurub M8 × 35 cu cap pătrat, zincat (2 buc.)
M8 × 35 square-head bolt, galvanised (2 pcs)

3 Colier Ø48 mm din tablă zincată
Ø48 mm clamp, galvanised steel

4 Piuliță M8 zincată (2 buc.)
M8 nut, galvanised (2 pcs)

Set pentru un punct de prindere. Pentru stâlp Ø60 mm, colierele se livrează la cerere.
Set for one fixing point. Clamps for Ø60 mm posts are available on request.