C19 Prohibition Sign – No Vehicles over 10.0 t on a Single Drive Axle (Non-Rehabilitated Road), Ø60 cm, Class I

Class I (EGP) Road Signs | Signs compliant with SR 1848-1:2024

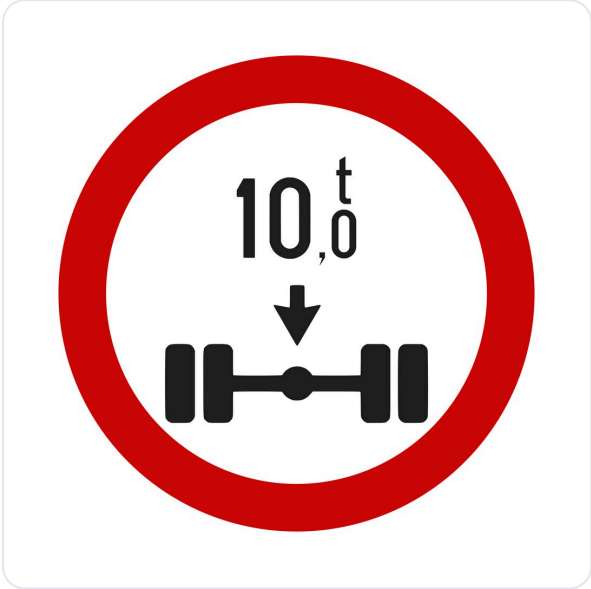

AT A GLANCE

- Prohibition or restriction sign C19 “No vehicles with a driven single-axle load exceeding 10.0 tonnes”, to SR 1848-1:2024.
- 10.0 t is the SR 1848-1:2024 value for non-rehabilitated roads (NR).
- 60 cm diameter disc, normal format, in 1 mm galvanised steel sheet.
- Class I retroreflective sheeting, 7-year service life.
- Fixings included: 2 clamps for Ø48 mm posts and 4 bolts with nuts.
- CE marked; sheeting and paint resistant to UV and weathering.

Product code	**C19-10**
Category	**Metal Road Signs**
Weight	**3 kg**
Compliance	**Class I (EGP) Road Signs**
Compliance	**Signs compliant with SR 1848-1:2024**

This product on attotrafic.ro
https://attotrafic.ro/en_US/products/c19-accesul-interzis-vehiculelor-cu-peste-10-0-t-pe-axa-simpla-motoare-drum-nereabilitat-o60-cm-clasa-i

Technical specifications

SR 1848-1 code	C19
Name in the standard	No vehicles with a driven single-axle load exceeding 10.0 tonnes
Type	Prohibition or restriction road sign
Shape and colours	White disc with a red border, with the value 10.0 t above the outline of an axle, marked with an arrow
Value shown	10.0 t

Road category (bearing capacity)	Non-rehabilitated road (NR)
Size	60 cm diameter
Format (SR 1848-2)	Normal
Red border	60 mm
Digit height	100 mm large digit, 60 mm small digit and “t”
Material	Galvanised steel sheet, 1 mm
Construction	Pressed edges, no sharp edges
Painting	Electrostatic, UV-resistant paint
Retroreflective sheeting	Class I (RA1), UV-resistant
Retroreflection (white, 0.2°/5°)	70 cd/(lx·m²)
Sheeting service life	7 years
Weight	3 kg
Fixings included	2 clamps, 4 bolts with nuts
Post diameter	Ø48 mm (Ø60 mm on request)
Standards	SR EN 12899-1:2007, SR 1848-1:2024, SR 1848-2:2011, SR 1848-3:2011
Marking	CE

Description

The C19 limits the load on a single drive axle, not the mass of the whole vehicle: a light lorry with its weight on one axle can damage a weak road as much as a heavy one. The sign shows the value 10.0 t above the outline of an axle.

Roads classified by bearing capacity as non-rehabilitated (NR) get the C19 with 10.0 t under SR 1848-1:2024. For the other road categories: 8.0 t on gravel roads (P); 9.0 t on modernised roads (M); 11.5 t on rehabilitated roads (R).

When class I is used

Class I (RA1) sheeting returns 70 cd/(lx·m²) for white to the driver and has a 7-year service life, enough on roads where headlights are the only light: local, minor and private roads or quiet streets. In areas with street lighting, shop windows, advertising and dense urban traffic, however, SR 1848-2 requires prismatic class 2 or 3 sheeting.

Where it goes, under SR 1848-1:2024

It goes at the start of the section, or at both ends of bridges, underpasses, tunnels and other places where vehicles with a single drive axle load above the value shown are banned.

Like all prohibition signs, it goes right after the junction before the restricted place, so drivers can go round without turning back, and it is repeated after every junction on the section. Exemptions for residents or certain vehicle categories are shown on the P34 and P18 additional panels.

Technical data

- 60 cm diameter disc (normal format, SR 1848-2): white with a red border, with the value 10.0 t above the outline of an axle, marked with an arrow;
- 1 mm galvanised steel sheet, with pressed edges, no sharp edges;
- electrostatically painted with UV-resistant paint;
- class I retroreflective sheeting (RA1), resistant to UV and weathering, with a 7-year service life;
- weight: 3 kg;
- fixings included: 2 clamps for Ø48 mm posts and 4 bolts with nuts;
- CE marked; compliant with SR EN 12899-1:2007, SR 1848-1:2024, SR 1848-2:2011 and SR 1848-3:2011.

Mounting and size

Fixings for the post are included: 2 clamps for Ø48 mm posts and 4 bolts with nuts; clamps for Ø60 mm posts are available on request. The bottom edge of the sign goes 1.50–2.50 m above the road or kerb, and the edge nearest the road 0.50–2.0 m from the road platform. The sign must be visible from at least 50 m in built-up areas and 100 m outside them.

The post is ordered separately. For a fixed installation in a concrete foundation: the galvanised Ø48 mm post, 300 cm. For temporary use, with no foundation: the Ø48 mm tripod post, 120 cm. On concrete or paving, where you cannot dig: the Ø60 mm flange post, 300 cm, bolted down; for it, ask for the Ø60 mm clamps when you order.

The 60 cm diameter is the normal format in SR 1848-2, for county and local roads, streets and private roads open to public traffic. National roads call for the large Ø80 cm format and motorways for the very large Ø100 cm one; the standard forbids using a smaller format than the road category requires.

Drawings and details · 1/3

C19 – Accesul interzis vehiculelor cu masa mai mare de ... tone pe axa simplă motoare

No vehicles with a driven single-axle load exceeding ... tonnes

Ø60 cm · dimensiunile feței indicatorului

Ø60 cm · sign face dimensions

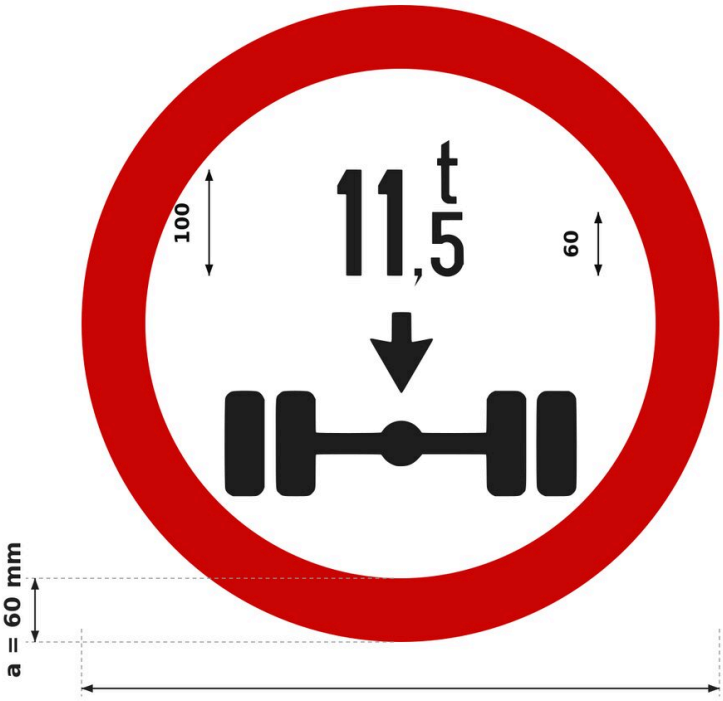

Fond alb, chenar roșu a; cotele sunt ale feței retroreflectorizante.
White background, red border a; dimensions of the retroreflective face.

Panoul suport depășește fața cu 5–10 mm (SR 1848-2, 6.1).
The backing panel is 5–10 mm larger than the face (SR 1848-2, 6.1).

Formatul se alege după categoria drumului (SR 1848-2, 5.2).
The format follows the road category (SR 1848-2, 5.2).

Cifrele și unitățile: scriere tip „îngust” (ca în figurile SR 1848-1:2024).
Digits and units: narrow type (as in the SR 1848-1:2024 figures).

Pe Ø600: cifra mare / cifra mică / unitatea = 100 / 60 / 60 mm (tab. 5).
On Ø600: big digit / small digit / unit = 100 / 60 / 60 mm (table 5).

Scriere SR 1848-3: tip „îngust”, H = 100 mm; tip „îngust”, H = 60 mm.
SR 1848-3 lettering: narrow type, H = 100 mm; narrow type, H = 60 mm.

Sursa: SR 1848-2:2011, tab. 3, tab. 4 și tab. 5.
Source: SR 1848-2:2011, table 3, table 4 and table 5.

Dimensiuni SR 1848-2 (mm)
SR 1848-2 dimensions (mm)

Ø40 cm
D = 400 · a = 50
drumuri vicinale cu trafic redus
low-traffic local access roads

Ø60 cm
D = 600 · a = 60
drumuri județene, comunale, străzi
county and communal roads, streets

Ø80 cm
D = 800 · a = 80
drumuri naționale
national roads

Ø100 cm
D = 1000 · a = 100
autostrăzi
motorways

Drawings and details · 2/3

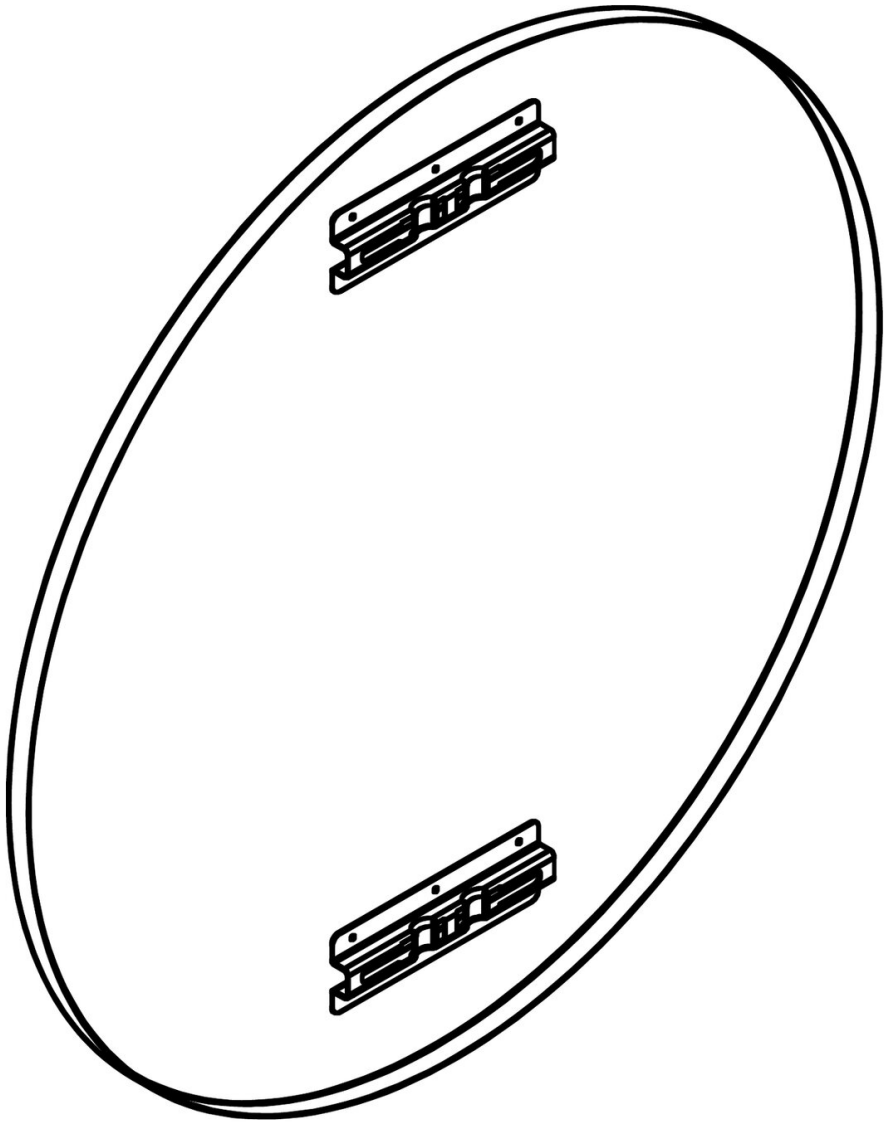

Drawings and details · 3/3

Prindere cu canal și colier, stâlp Ø48 mm

Channel and clamp fixing, Ø48 mm post

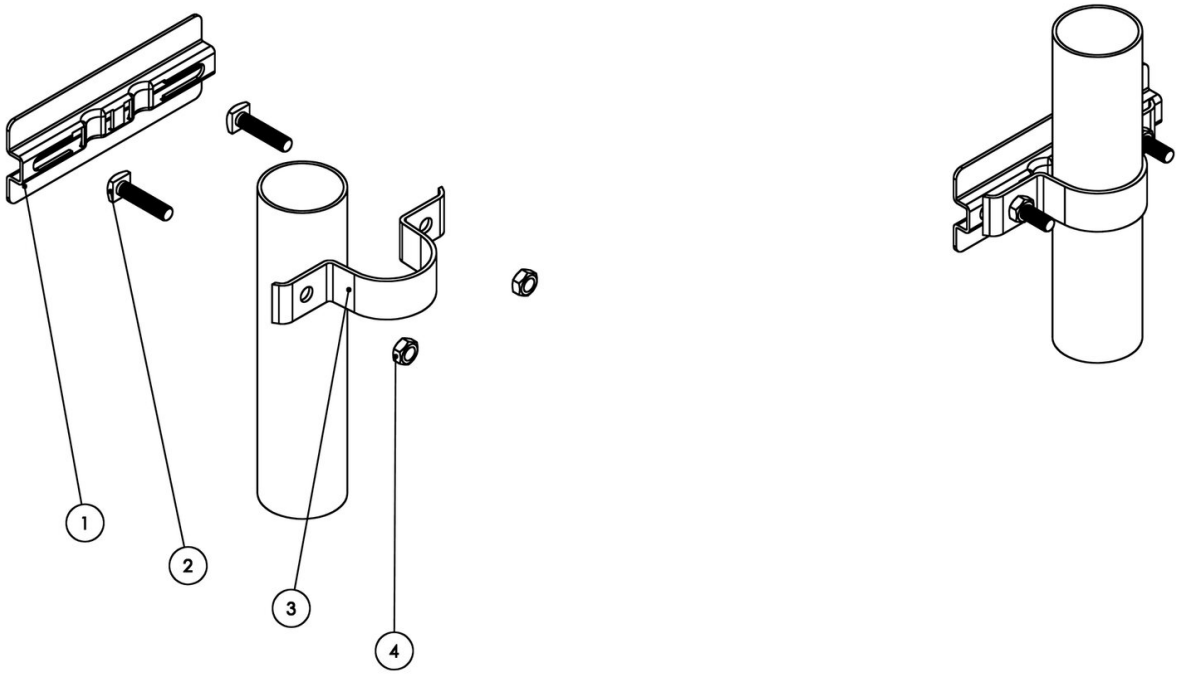

1 Canal de prindere din aluminiu (pe spatele panoului)
Aluminium fixing channel (on the back of the panel)

2 Șurub M8 × 35 cu cap pătrat, zincat (2 buc.)
M8 × 35 square-head bolt, galvanised (2 pcs)

3 Colier Ø48 mm din tablă zincată
Ø48 mm clamp, galvanised steel

4 Piuliță M8 zincată (2 buc.)
M8 nut, galvanised (2 pcs)

Set pentru un punct de prindere. Pentru stâlp Ø60 mm, colierele se livrează la cerere.
Set for one fixing point. Clamps for Ø60 mm posts are available on request.