# C21 Prohibition Sign – Minimum Distance of 10 m between Vehicles, Ø80 cm, Class II

Signs compliant with SR 1848-1:2024




## AT A GLANCE

- Prohibition or restriction sign C21 "Minimum safety distance of 10 m between motor vehicles", to SR 1848-1:2024.
- 80 cm diameter disc, large format, in 1 mm galvanised steel sheet.
- Class II (RA2) prismatic sheeting, guaranteed 10-year service life.
- Fixings included: 2 clamps for Ø48 mm posts and 4 bolts with nuts.
- CE marked; sheeting and paint resistant to UV and weathering.

| | |
|---|---|
| Product code | **C21-10_II** |
| Category | **Metal Road Signs (Class II)** |
| Weight | **5 kg** |
| Compliance | **Signs compliant with SR 1848-1:2024** |

This product on attotrafic.ro
**https://attotrafic.ro/en_US/products/c21-distanta-minima-de-10-m-intre-autovehicule-o80-cm-clasa-ii**

## Technical specifications

| | |
|---|---|
| **SR 1848-1 code** | C21 |
| **Name in the standard** | Minimum safety distance of 10 m between motor vehicles |
| **Type** | Prohibition or restriction road sign |
| **Shape and colours** | White disc with a red border, with the outlines of two cars and the 10 m distance between them |
| **Value shown** | 10 m |
| **Size** | Ø80 cm |
| **Format (SR 1848-2)** | Large |

| | |
|---|---|
| **Material** | Galvanised steel sheet, 1 mm |
| **Construction** | Pressed edges, no sharp edges |
| **Painting** | Electrostatic, UV-resistant paint |
| **Retroreflective sheeting** | Class II (RA2), prismatic, UV-resistant |
| **Retroreflection (white, 0.2°/5°)** | 250 cd/(lx·m²) |
| **Sheeting service life** | 10 years (SR 1848-2) |
| **Fixings included** | 2 clamps, 4 bolts with nuts |
| **Post diameter** | Ø48 mm (Ø60 mm on request) |
| **Standards** | SR EN 12899-1:2007, SR 1848-1:2024, SR 1848-2:2011, SR 1848-3:2011 |
| **Marking** | CE |

## Description

The C21 requires a gap of at least 10 m between moving motor vehicles, for example on long bridges or in tunnels. The sign shows two cars and the distance between them. The disc is Ø80 cm, the large format in SR 1848-2, and the class II prismatic sheeting keeps it visible on lit streets as well.

### Why class II

The difference from class I shows at night: class II (RA2) prismatic sheeting returns three to four times more light, and the gap grows when the sign is mounted at the side, far from the centre of the road. On lit streets with shop windows and advertising, SR 1848-2 requires prismatic class 2 or 3 sheeting. The standard guarantees a 10-year service life for class II sheeting, three years more than for class I.

### Where it goes, under SR 1848-1:2024

It goes at the start of a section where a safety gap must be kept between moving motor vehicles, together with the P8 additional panel showing the length of the section. It is repeated every 1.5–2.0 km and after every junction; without the panel, it applies up to the first junction.

### Technical data

- 80 cm diameter disc (large format, SR 1848-2): white with a red border, with the outlines of two cars and the 10 m distance between them;
- 1 mm galvanised steel sheet, with pressed edges, no sharp edges;
- electrostatically painted with UV-resistant paint;
- class II (RA2) prismatic retroreflective sheeting, resistant to UV and weathering, with a guaranteed 10-year service life;
- fixings included: 2 clamps for Ø48 mm posts and 4 bolts with nuts;
- CE marked; compliant with SR EN 12899-1:2007, SR 1848-1:2024, SR 1848-2:2011 and SR 1848-3:2011.

### Mounting and size

Fixings for the post are included: 2 clamps for Ø48 mm posts and 4 bolts with nuts; clamps for Ø60 mm posts are available on request. The bottom edge of the sign goes 1.50–2.50 m above the road or kerb, and the edge nearest the road 0.50–2.0 m from the road platform.

The post is ordered separately. For a fixed installation in a concrete foundation: the galvanised Ø48 mm post, 300 cm. For temporary use, with no foundation: the Ø48 mm tripod post, 120 cm. On concrete or paving, where you cannot dig: the Ø60 mm flange post, 300 cm, bolted down; for it, ask for the Ø60 mm clamps when you order.

The 80 cm diameter is the large format in SR 1848-2, required on national roads; motorways use the very large 100 cm format.

## Drawings and details · 1/3

# C21 – Interzis autovehiculelor de a circula fără a menține între ele o distanță de siguranță rutieră de cel puțin ... m

Minimum safety distance of ... m between motor vehicles

Ø80 cm · dimensiunile feței indicatorului

Ø80 cm · sign face dimensions

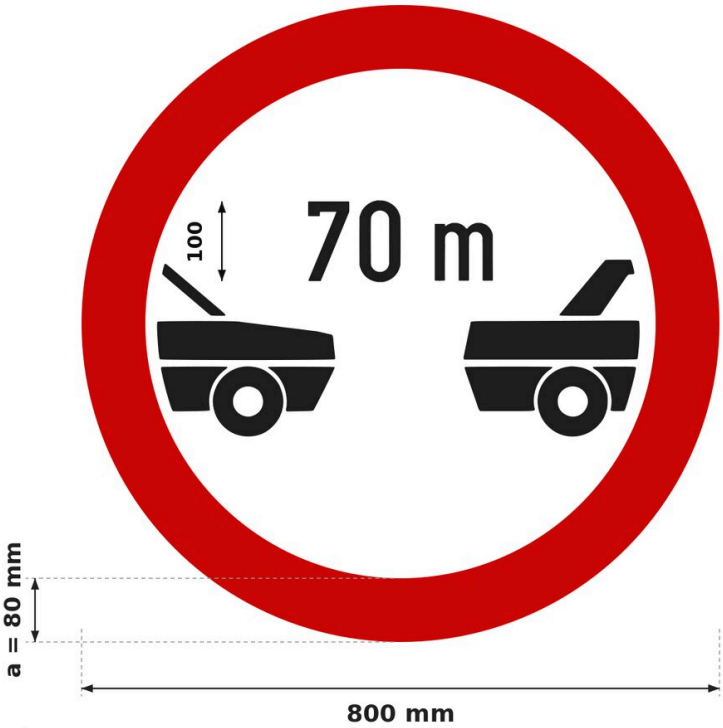


**Dimensiuni SR 1848-2 (mm)**
SR 1848-2 dimensions (mm)

### Ø40 cm
D = 400 · a = 50
drumuri vicinale cu trafic redus
low-traffic local access roads

### Ø60 cm
D = 600 · a = 60
drumuri județene, comunale, străzi
county and communal roads, streets

### Ø80 cm
D = 800 · a = 80
drumuri naționale
national roads

### Ø100 cm
D = 1000 · a = 100
autostrăzi
motorways

Fond alb, chenar roșu a; cotele sunt ale feței retroreflectorizante.
White background, red border a; dimensions of the retroreflective face.

Panoul suport depășește fața cu 5–10 mm (SR 1848-2, 6.1).
The backing panel is 5–10 mm larger than the face (SR 1848-2, 6.1).

Formatul se alege după categoria drumului (SR 1848-2, 5.2).
The format follows the road category (SR 1848-2, 5.2).

Cifrele și unitățile: scriere tip „îngust” (ca în figurile SR 1848-1:2024).
Digits and units: narrow type (as in the SR 1848-1:2024 figures).

Cifrele și unitatea: 50 / 75 / 100 / 125 mm (tab. 5).
Digits and unit: 50 / 75 / 100 / 125 mm (table 5).

Scriere SR 1848-3: tip „îngust”, H = 100 mm.
SR 1848-3 lettering: narrow type, H = 100 mm.

Sursa: SR 1848-2:2011, tab. 3, tab. 4 și tab. 5.
Source: SR 1848-2:2011, table 3, table 4 and table 5.

## Drawings and details · 2/3

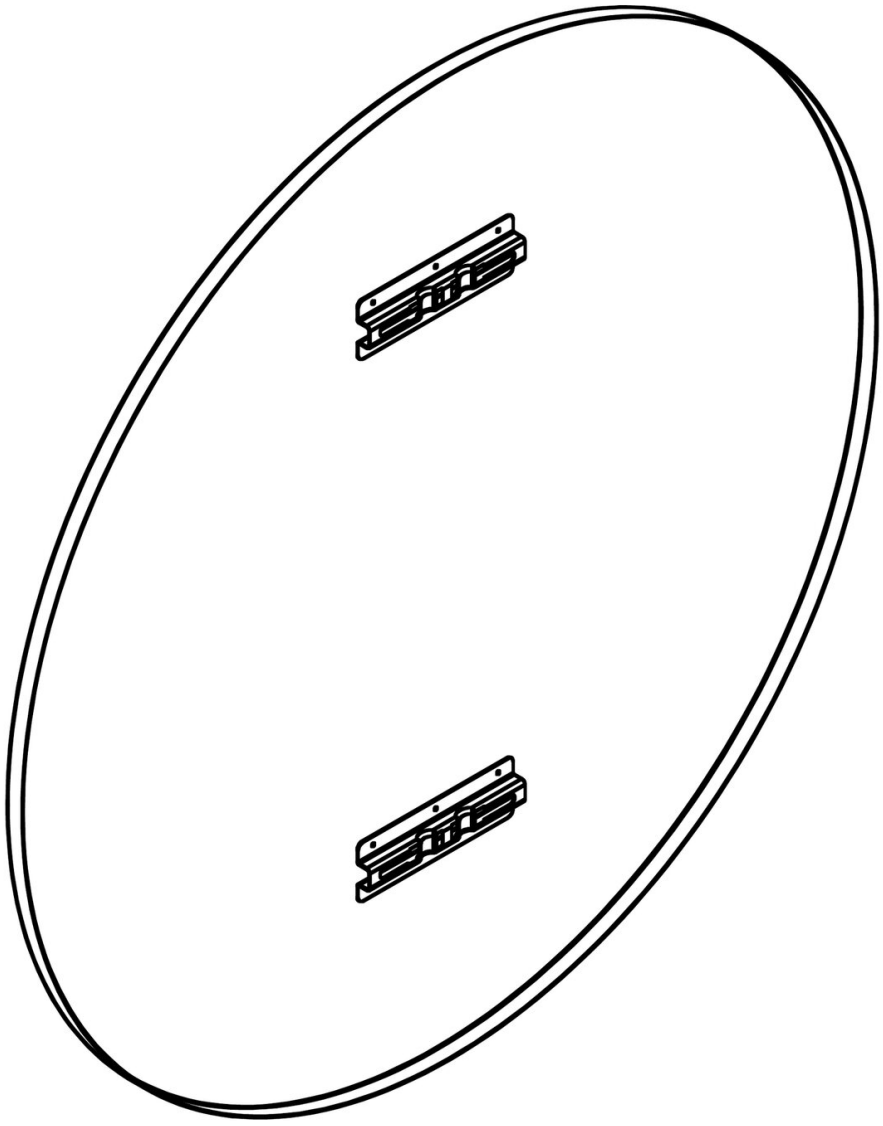

## Drawings and details · 3/3

# Prindere cu canal și colier, stâlp Ø48 mm

Channel and clamp fixing, Ø48 mm post

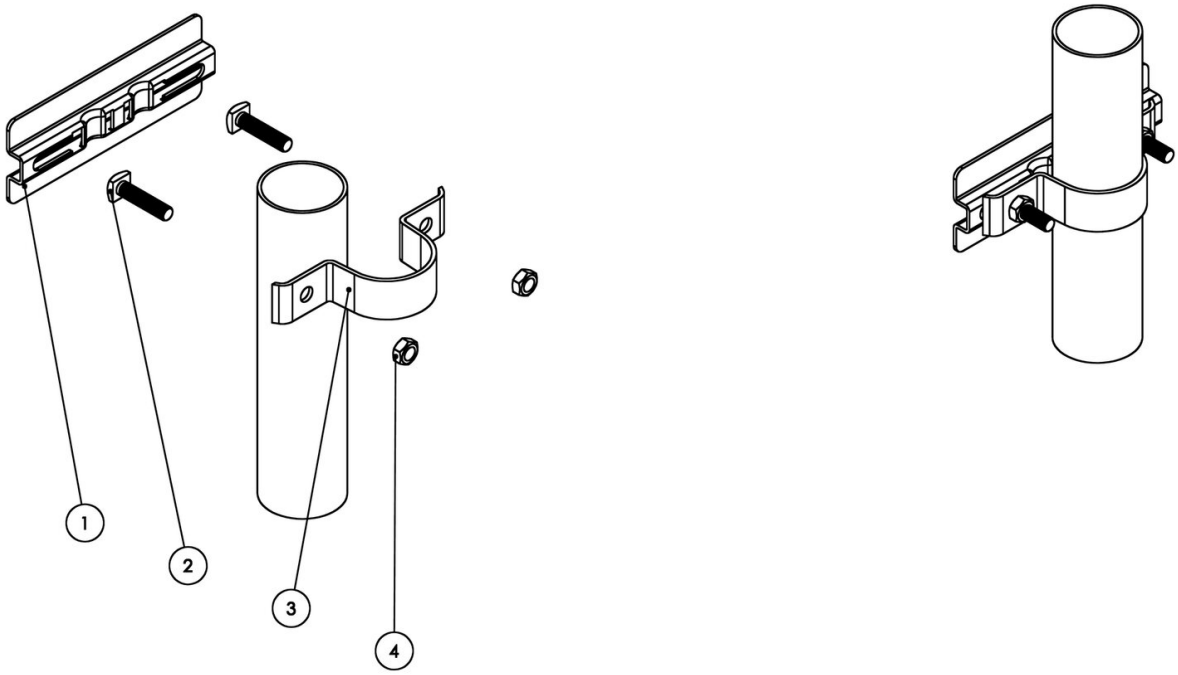


**1** Canal de prindere din aluminiu (pe spatele panoului)
Aluminium fixing channel (on the back of the panel)

**2** Șurub M8 × 35 cu cap pătrat, zincat (2 buc.)
M8 × 35 square-head bolt, galvanised (2 pcs)

**3** Colier Ø48 mm din tablă zincată
Ø48 mm clamp, galvanised steel

**4** Piuliță M8 zincată (2 buc.)
M8 nut, galvanised (2 pcs)

Set pentru un punct de prindere. Pentru stâlp Ø60 mm, colierele se livrează la cerere.
Set for one fixing point. Clamps for Ø60 mm posts are available on request.