C28 Prohibition Sign – Differentiated Speed Limit 70/50 km/h, Ø60 cm, Class I

Class I (EGP) Road Signs | Signs compliant with SR 1848-1:2024

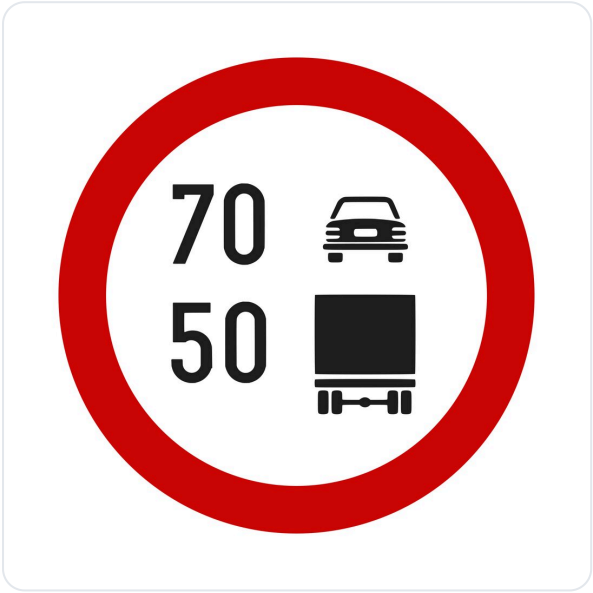

AT A GLANCE

- Prohibition or restriction sign C28 "Different speed limits by vehicle category (70/50 km/h)", to SR 1848-1:2024.
- 60 cm diameter disc, normal format, in 1 mm galvanised steel sheet.
- Class I retroreflective sheeting, 7-year service life.
- Fixings included: 2 clamps for Ø48 mm posts and 4 bolts with nuts.
- CE marked; sheeting and paint resistant to UV and weathering.

Product code	**C28-7050**
Category	**Metal Road Signs**
Weight	**3 kg**
Compliance	**Class I (EGP) Road Signs**
Compliance	**Signs compliant with SR 1848-1:2024**

This product on attotrafic.ro
https://attotrafic.ro/en_US/products/c28-limitare-de-viteza-diferentiata-70-50-km-h-o60-cm-clasa-i

Technical specifications

SR 1848-1 code	C28
Name in the standard	Different speed limits by vehicle category (70/50 km/h)
Type	Prohibition or restriction road sign
Shape and colours	White disc with a red border, with the values 70 and 50 km/h and the outlines of a car (top) and a lorry (bottom)
Value shown	70/50 km/h
Size	60 cm diameter
Format (SR 1848-2)	Normal

Red border	60 mm
Digit height	100 mm digits
Material	Galvanised steel sheet, 1 mm
Construction	Pressed edges, no sharp edges
Painting	Electrostatic, UV-resistant paint
Retroreflective sheeting	Class I (RA1), UV-resistant
Retroreflection (white, 0.2°/5°)	70 cd/(lx·m²)
Sheeting service life	7 years
Weight	3 kg
Fixings included	2 clamps, 4 bolts with nuts
Post diameter	Ø48 mm (Ø60 mm on request)
Standards	SR EN 12899-1:2007, SR 1848-1:2024, SR 1848-2:2011, SR 1848-3:2011
Marking	CE

Description

The C28 puts two speed limits on one sign: the upper value, with a car outline, for motor vehicles, and the lower one, with a lorry outline, for goods vehicles. This sign shows 70/50 km/h.

When class I is used

The sign has class I (RA1) retroreflective sheeting: 70 cd/(lx·m²) for white and a 7-year service life. It is the economical choice for places without many light sources, such as local, minor and private roads or streets without strong lighting. Where there is street lighting, shop windows or advertising, SR 1848-2 requires prismatic class 2 or 3 sheeting, which stands out better against a lit background.

Where it goes, under SR 1848-1:2024

It goes at the start of a section where goods vehicles may not exceed the speed in the lower part of the sign and other motor vehicles the speed in the upper part. The end of the limit is signed with the C33 (end of all restrictions).

Like all prohibition signs, it goes right after the junction before the restricted place, so drivers can go round without turning back, and it is repeated after every junction on the section. Exemptions for residents or certain vehicle categories are shown on the P34 and P18 additional panels.

Technical data

- 60 cm diameter disc (normal format, SR 1848-2): white with a red border, with the values 70 and 50 km/h and the outlines of a car (top) and a lorry (bottom);
- 1 mm galvanised steel sheet, with pressed edges, no sharp edges;
- electrostatically painted with UV-resistant paint;
- class I retroreflective sheeting (RA1), resistant to UV and weathering, with a 7-year service life;
- weight: 3 kg;
- fixings included: 2 clamps for Ø48 mm posts and 4 bolts with nuts;
- CE marked; compliant with SR EN 12899-1:2007, SR 1848-1:2024, SR 1848-2:2011 and SR 1848-3:2011.

Mounting and size

Fixings for the post are included: 2 clamps for Ø48 mm posts and 4 bolts with nuts; clamps for Ø60 mm posts are available on request. The bottom edge of the sign goes 1.50–2.50 m above the road or kerb, and the edge nearest the road 0.50–2.0 m from the road platform. The sign must be visible from at least 50 m in built-up areas and 100 m outside them.

The post is ordered separately. For a fixed installation in a concrete foundation: the galvanised Ø48 mm post, 300 cm. For temporary use, with no foundation: the Ø48 mm tripod post, 120 cm. On concrete or paving, where you cannot dig: the Ø60 mm flange post, 300 cm, bolted down; for it, ask for the Ø60 mm clamps when you order.

The 60 cm diameter is the normal format in SR 1848-2, for county and local roads, streets and private roads open to public traffic. National roads call for the large Ø80 cm format and motorways for the very large Ø100 cm one; the standard forbids using a smaller

format than the road category requires.

Drawings and details · 1/3

C28 – Limitare de viteză diferențiată pe categorii de autovehicule

Different speed limits by vehicle category

Ø60 cm · dimensiunile feței indicatorului

Ø60 cm · sign face dimensions

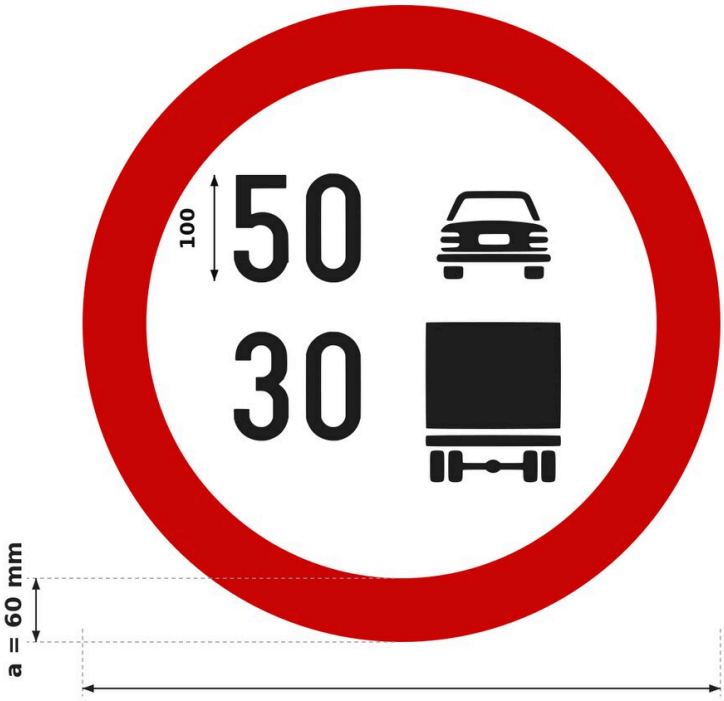

Fond alb, chenar roșu a; cotele sunt ale feței retroreflectorizante.
White background, red border a; dimensions of the retroreflective face.

Panoul suport depășește fața cu 5–10 mm (SR 1848-2, 6.1).
The backing panel is 5–10 mm larger than the face (SR 1848-2, 6.1).

Formatul se alege după categoria drumului (SR 1848-2, 5.2).
The format follows the road category (SR 1848-2, 5.2).

Cifrele și unitățile: scriere tip „îngust” (ca în figurile SR 1848-1:2024).
Digits and units: narrow type (as in the SR 1848-1:2024 figures).

Cifrele: 70 / 100 / 135 / 170 mm (tab. 5).
Digits: 70 / 100 / 135 / 170 mm (table 5).

Scriere SR 1848-3: tip „îngust”, H = 100 mm.
SR 1848-3 lettering: narrow type, H = 100 mm.

Sursa: SR 1848-2:2011, tab. 3, tab. 4 și tab. 5.
Source: SR 1848-2:2011, table 3, table 4 and table 5.

Dimensiuni SR 1848-2 (mm)
SR 1848-2 dimensions (mm)

Ø40 cm
D = 400 · a = 50
drumuri vicinale cu trafic redus
low-traffic local access roads

Ø60 cm
D = 600 · a = 60
drumuri județene, comunale, străzi
county and communal roads, streets

Ø80 cm
D = 800 · a = 80
drumuri naționale
national roads

Ø100 cm
D = 1000 · a = 100
autostrăzi
motorways

Drawings and details · 2/3

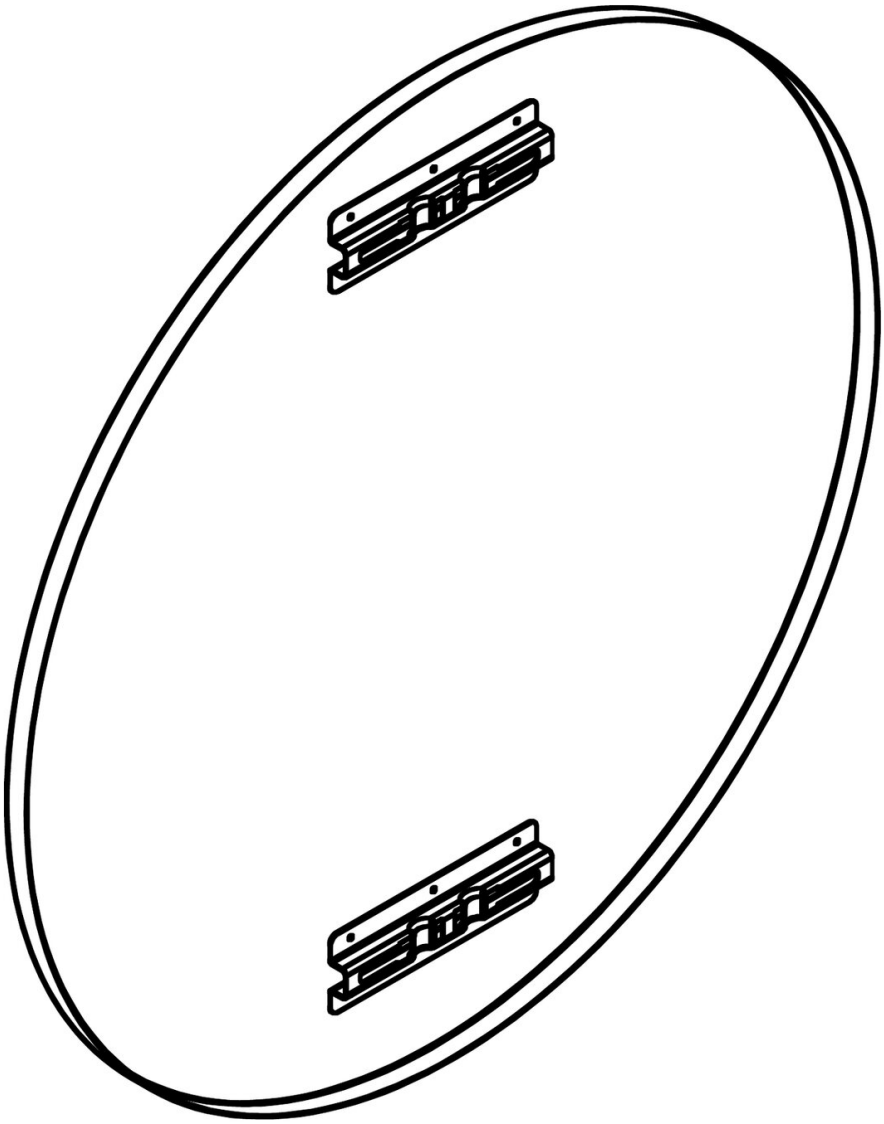

Drawings and details · 3/3

Prindere cu canal și colier, stâlp Ø48 mm

Channel and clamp fixing, Ø48 mm post

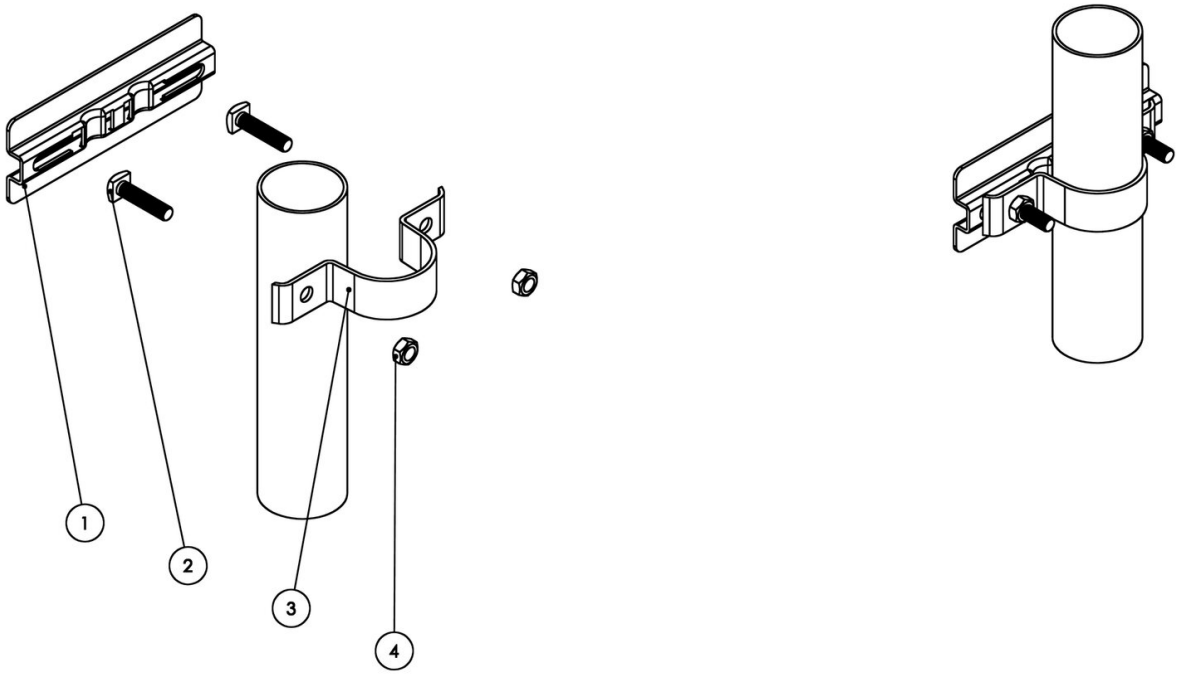

1 Canal de prindere din aluminiu (pe spatele panoului)
Aluminium fixing channel (on the back of the panel)

2 Șurub M8 × 35 cu cap pătrat, zincat (2 buc.)
M8 × 35 square-head bolt, galvanised (2 pcs)

3 Colier Ø48 mm din tablă zincată
Ø48 mm clamp, galvanised steel

4 Piuliță M8 zincată (2 buc.)
M8 nut, galvanised (2 pcs)

Set pentru un punct de prindere. Pentru stâlp Ø60 mm, colierele se livrează la cerere.
Set for one fixing point. Clamps for Ø60 mm posts are available on request.