C34 Prohibition Sign – End of Speed Limit 70 km/h, Ø60 cm, Class I

Class I (EGP) Road Signs | Signs compliant with SR 1848-1:2024

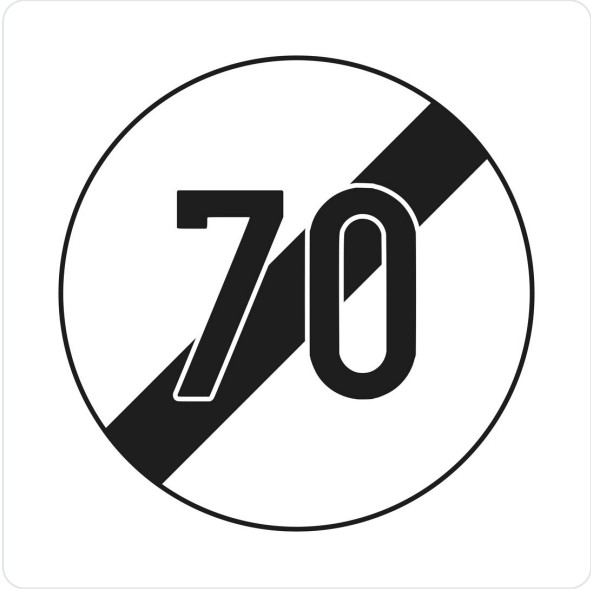

AT A GLANCE

- Prohibition or restriction sign C34 “End of speed limit (70 km/h)”, to SR 1848-1:2024.
- 60 cm diameter disc, normal format, in 1 mm galvanised steel sheet.
- Class I retroreflective sheeting, 7-year service life.
- Fixings included: 2 clamps for Ø48 mm posts and 4 bolts with nuts.
- CE marked; sheeting and paint resistant to UV and weathering.

Product code	**C34-70**
Category	**Metal Road Signs**
Weight	**3 kg**
Compliance	**Class I (EGP) Road Signs**
Compliance	**Signs compliant with SR 1848-1:2024**

This product on attotrafic.ro
https://attotrafic.ro/en_US/products/c34-sfarsitul-limitarii-de-viteza-70-km-h-o60-cm-clasa-i

Technical specifications

SR 1848-1 code	C34
Name in the standard	End of speed limit (70 km/h)
Type	Prohibition or restriction road sign
Shape and colours	White disc with the value 70 km/h in black, crossed by a black diagonal band
Value shown	70 km/h
Size	60 cm diameter
Format (SR 1848-2)	Normal

Black diagonal band	100 mm
Digit height	260 mm digits
Material	Galvanised steel sheet, 1 mm
Construction	Pressed edges, no sharp edges
Painting	Electrostatic, UV-resistant paint
Retroreflective sheeting	Class I (RA1), UV-resistant
Retroreflection (white, 0.2°/5°)	70 cd/(lx·m²)
Sheeting service life	7 years
Weight	3 kg
Fixings included	2 clamps, 4 bolts with nuts
Post diameter	Ø48 mm (Ø60 mm on request)
Standards	SR EN 12899-1:2007, SR 1848-1:2024, SR 1848-2:2011, SR 1848-3:2011
Marking	CE

Description

The C34 showing 70 km/h ends the limit set with the C27 speed limit 70 km/h sign. After it, the legal maximum speed for that road and vehicle applies again, unless other signs say otherwise.

When class I is used

Class I (RA1) sheeting returns 70 cd/(lx·m²) for white to the driver and has a 7-year service life, enough on roads where headlights are the only light: local, minor and private roads or quiet streets. In areas with street lighting, shop windows, advertising and dense urban traffic, however, SR 1848-2 requires prismatic class 2 or 3 sheeting.

Where it goes, under SR 1848-1:2024

It goes where the zone with a speed limit set by signs ends.

Technical data

- 60 cm diameter disc (normal format, SR 1848-2): white with the value 70 km/h in black, crossed by a black diagonal band;
- 1 mm galvanised steel sheet, with pressed edges, no sharp edges;
- electrostatically painted with UV-resistant paint;
- class I retroreflective sheeting (RA1), resistant to UV and weathering, with a 7-year service life;
- weight: 3 kg;
- fixings included: 2 clamps for Ø48 mm posts and 4 bolts with nuts;
- CE marked; compliant with SR EN 12899-1:2007, SR 1848-1:2024, SR 1848-2:2011 and SR 1848-3:2011.

Mounting and size

Fixings for the post are included: 2 clamps for Ø48 mm posts and 4 bolts with nuts; clamps for Ø60 mm posts are available on request. The bottom edge of the sign goes 1.50–2.50 m above the road or kerb, and the edge nearest the road 0.50–2.0 m from the road platform. The sign must be visible from at least 50 m in built-up areas and 100 m outside them.

The post is ordered separately. For a fixed installation in a concrete foundation: the galvanised Ø48 mm post, 300 cm. For temporary use, with no foundation: the Ø48 mm tripod post, 120 cm. On concrete or paving, where you cannot dig: the Ø60 mm flange post, 300 cm, bolted down; for it, ask for the Ø60 mm clamps when you order.

The 60 cm diameter is the normal format in SR 1848-2, for county and local roads, streets and private roads open to public traffic. National roads call for the large Ø80 cm format and motorways for the very large Ø100 cm one; the standard forbids using a smaller format than the road category requires.

Drawings and details · 1/3

C34 – Sfârșitul limitării de viteză

End of speed limit

Ø60 cm · dimensiunile feței indicatorului

Ø60 cm · sign face dimensions

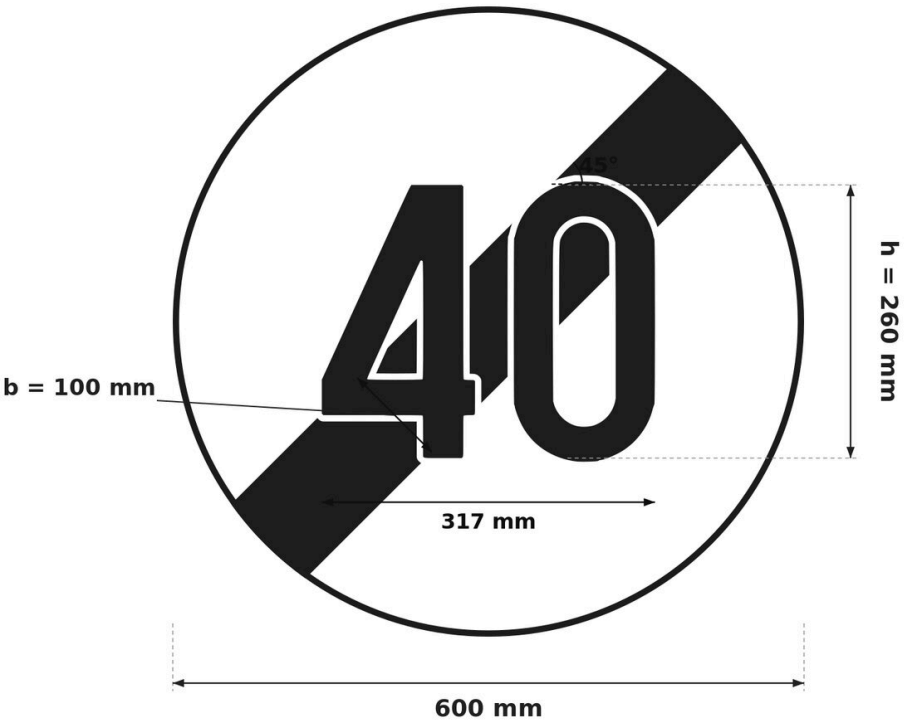

Dimensiuni SR 1848-2 (mm)
SR 1848-2 dimensions (mm)

Ø40 cm
D = 400 · h = 175
drumuri vicinale cu trafic redus
low-traffic local access roads

Ø60 cm
D = 600 · h = 260
drumuri județene, comunale, străzi
county and communal roads, streets

Ø80 cm
D = 800 · h = 345
drumuri naționale
national roads

Ø100 cm
D = 1000 · h = 435
autostrăzi
motorways

Fond alb, contur negru subțire; cotele sunt ale feței retroreflectorizante.
White background, thin black outline; dimensions of the retroreflective face.

Panoul suport depășește fața cu 5–10 mm (SR 1848-2, 6.1).
The backing panel is 5–10 mm larger than the face (SR 1848-2, 6.1).

Formatul se alege după categoria drumului (SR 1848-2, 5.2).
The format follows the road category (SR 1848-2, 5.2).

Cifrele și unitățile: scriere tip „îngust” (ca în figurile SR 1848-1:2024).
Digits and units: narrow type (as in the SR 1848-1:2024 figures).

Dunga înclinată de sfârșit: 70 / 100 / 135 / 170 mm (tab. 4), sub cifre; cifrele au un contur alb subțire (ca în figura SR 1848-1:2024).
End band: 70 / 100 / 135 / 170 mm (table 4), under the digits; the digits have a thin white outline (as in the SR 1848-1:2024 figure).

Scriere SR 1848-3: tip „îngust”, H = 260 mm.
SR 1848-3 lettering: narrow type, H = 260 mm.

Sursa: SR 1848-2:2011, tab. 3, tab. 4 și tab. 5.
Source: SR 1848-2:2011, table 3, table 4 and table 5.

Drawings and details · 2/3

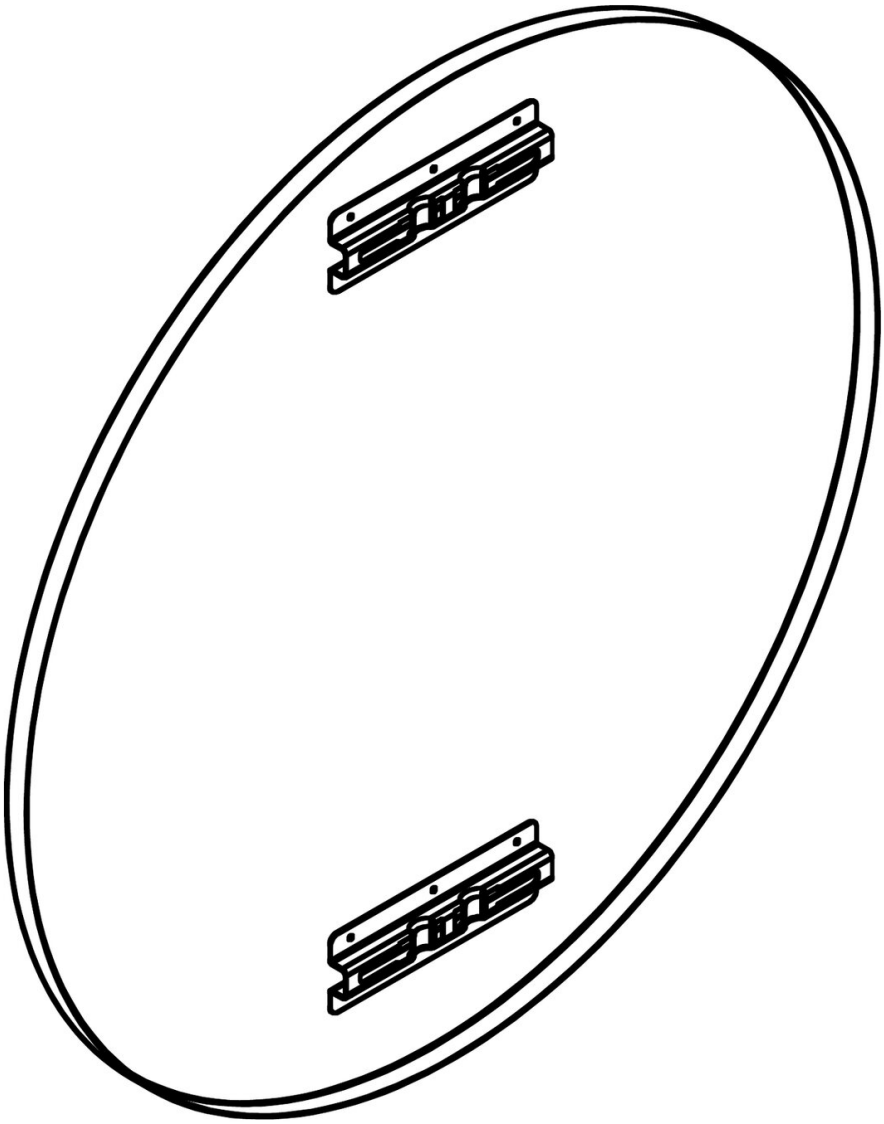

Drawings and details · 3/3

Prindere cu canal și colier, stâlp Ø48 mm
Channel and clamp fixing, Ø48 mm post

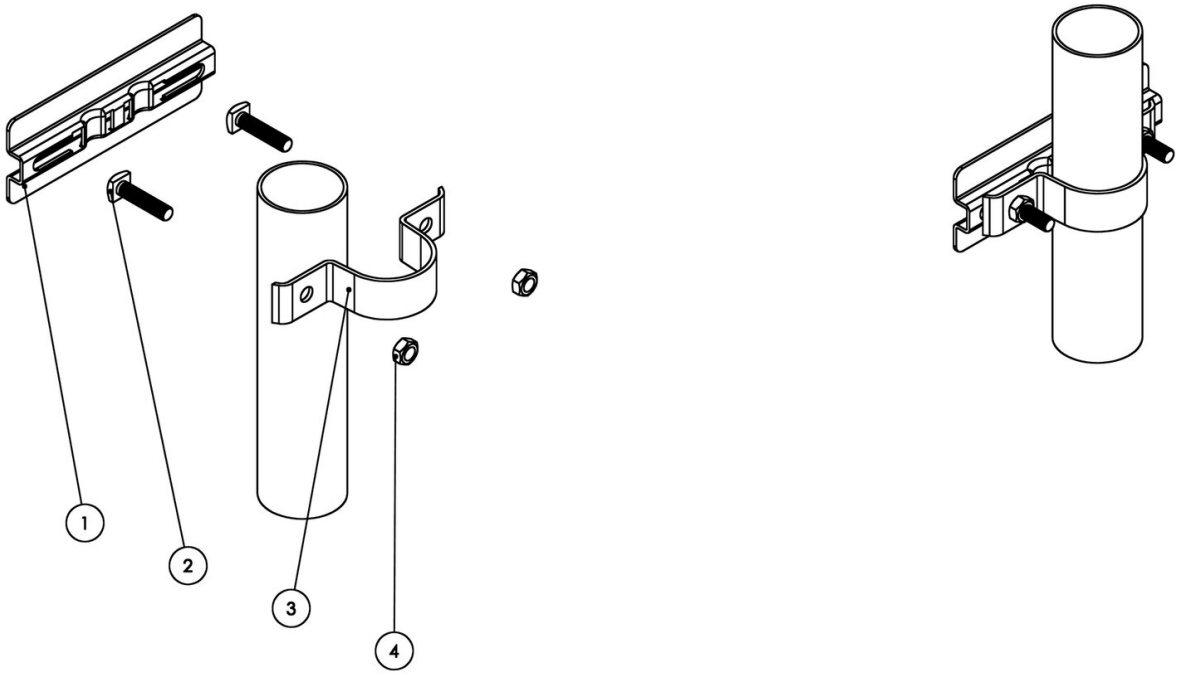

1 Canal de prindere din aluminiu (pe spatele panoului)
Aluminium fixing channel (on the back of the panel)

2 Șurub M8 × 35 cu cap pătrat, zincat (2 buc.)
M8 × 35 square-head bolt, galvanised (2 pcs)

3 Colier Ø48 mm din tablă zincată
Ø48 mm clamp, galvanised steel

4 Piuliță M8 zincată (2 buc.)
M8 nut, galvanised (2 pcs)

Set pentru un punct de prindere. Pentru stâlp Ø60 mm, colierele se livrează la cerere.
Set for one fixing point. Clamps for Ø60 mm posts are available on request.