F52 Direction Sign – Lane Selection by Direction, Start of the Right-Hand Lane, 65×85 cm, Class I

Class I (EGP) Road Signs | Signs compliant with SR 1848-1:2024

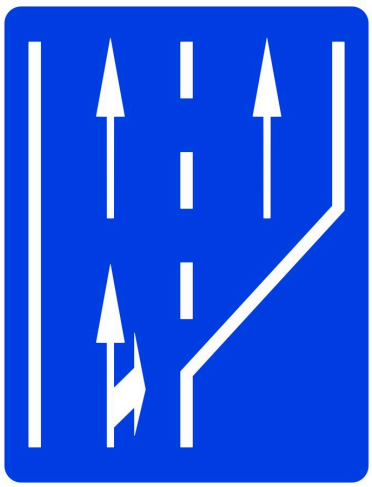

AT A GLANCE

- Direction sign F52 “Lane selection by direction on the main carriageway. Start of the right-hand traffic lane”, to SR 1848-1:2024.
- Blue rectangle, 65 × 85 cm, in 1 mm galvanised steel sheet.
- Class I retroreflective sheeting, 7-year service life.
- Fixings included: 2 clamps for Ø48 mm posts and 4 bolts with nuts.
- CE marked; sheeting and paint resistant to UV and weathering.

Product code	**F52**
Category	**Metal Road Signs**
Weight	**5 kg**
Compliance	**Class I (EGP) Road Signs**
Compliance	**Signs compliant with SR 1848-1:2024**

This product on attotrafic.ro
https://attotrafic.ro/en_US/products/f52-selectarea-circulatiei-pe-directii-de-mers-inceputul-benzii-din-dreapta-65x85-cm-clasa-i

Technical specifications

SR 1848-1 code	F52
Name in the standard	Lane selection by direction on the main carriageway. Start of the right-hand traffic lane
Type	Direction road sign
Shape and colours	Blue rectangle with a white lane diagram (one lane widening to two per direction) and white arrows pointing ahead
Size	65 × 85 cm
Material	Galvanised steel sheet, 1 mm

Construction	Rounded corners, pressed edges, no sharp edges
Painting	Electrostatic, UV-resistant paint
Retroreflective sheeting	Class I (RA1), UV-resistant
Retroreflection (white, 0.2°/5°)	70 cd/(lx·m²)
Sheeting service life	7 years
Weight	5 kg
Fixings included	2 clamps, 4 bolts with nuts
Post diameter	Ø48 mm (Ø60 mm on request)
Standards	SR EN 12899-1:2007, SR 1848-1:2024, SR 1848-2:2011, SR 1848-3:2011
Marking	CE

Description

The F52 marks the point where the road changes from one lane per direction to two lanes per direction, with the new lane opening on the right. The blue panel shows the lane lines and white arrows: one arrow ahead in each lane, and the arrow in the original lane carries a mark towards the new lane, so drivers can choose their lane early by direction of travel.

When class I is used

The sign has class I (RA1) retroreflective sheeting: 70 cd/(lx·m²) for white and a 7-year service life. It is the economical choice for places without many light sources, such as local, minor and private roads or streets without strong lighting. Where there is street lighting, shop windows or advertising, SR 1848-2 requires prismatic class 2 or 3 sheeting, which stands out better against a lit background.

Where it goes, under SR 1848-1:2024

It goes at the start of the section where the road changes from one lane per direction to two lanes per direction. The layout on the sign is adapted to the site. The sign can also be used on motorways, where it has a green background.

The F52 is a new sign, introduced by SR 1848-1:2024. Its pair, the F52a, is used when the new lane opens on the left.

Direction signs guide drivers and show special-purpose lanes on the carriageway. On ordinary public roads they have a blue background with white lettering, and on motorways a green one.

Technical data

- 65 × 85 cm panel: blue rectangle with a white lane diagram, one lane widening to two per direction, and white arrows pointing ahead;
- 1 mm galvanised steel sheet, with rounded corners and pressed edges, no sharp edges;
- electrostatically painted with UV-resistant paint;
- class I retroreflective sheeting (RA1), resistant to UV and weathering, with a 7-year service life;
- weight: 5 kg;
- fixings included: 2 clamps for Ø48 mm posts and 4 bolts with nuts;
- CE marked; compliant with SR EN 12899-1:2007, SR 1848-1:2024, SR 1848-2:2011 and SR 1848-3:2011.

Mounting and size

Fixings for the post are included: 2 clamps for Ø48 mm posts and 4 bolts with nuts; clamps for Ø60 mm posts are available on request. The bottom edge of the sign goes 1.50–2.50 m above the road or kerb, and the edge nearest the road 0.50–2.0 m from the road platform. The sign must be visible from at least 50 m in built-up areas and 100 m outside them.

The post is ordered separately. For a fixed installation in a concrete foundation: the galvanised Ø48 mm post, 300 cm. For temporary use, with no foundation: the Ø48 mm tripod post, 120 cm. On concrete or paving, where you cannot dig: the Ø60 mm flange post, 300 cm, bolted down; for it, ask for the Ø60 mm clamps when you order.

The panel measures 65 × 85 cm. SR 1848-2:2011 has no row for the F52 yet; the size of the other lane panels is used.

Drawings and details · 1/3

F52 – Selectarea circulației pe direcții de mers în cale curentă. Începutul benzii de circulație din dreapta

Lane selection by direction on the main carriageway. Start of the right-hand traffic lane

65 x 85 cm · dimensiunile feței indicatorului

65 x 85 cm · sign face dimensions

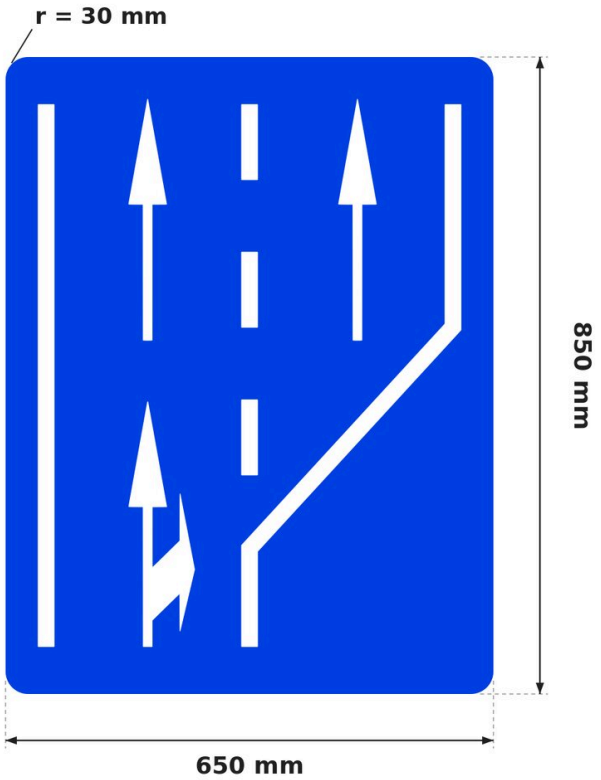

Dimensiuni (mm) Dimensions (mm)
65 x 85 cm 650 x 850 · r = 30 toate drumurile all roads

Cotele sunt ale feței retroreflectorizante.
Dimensions of the retroreflective face.

Indicator nou în SR 1848-1:2024, fără rând în SR 1848-2; mărimea ca la celelalte panouri de benzi (650 x 850).
New in SR 1848-1:2024, no row in SR 1848-2; size as the other lane panels (650 x 850).

Desenat după figura din SR 1848-1:2024; săgețile și liniile nu sunt cotate în standard.
Drawn from the SR 1848-1:2024 figure; arrows and lines are not dimensioned in the standard.

Schema se adaptează situației din teren (SR 1848-1:2024); imaginea arată figura din standard.
The layout is adapted to the site (SR 1848-1:2024); the picture shows the standard's figure.

Panoul suport depășește fața cu 5–10 mm (SR 1848-2, 6.1).
The backing panel is 5–10 mm larger than the face (SR 1848-2, 6.1).

Colțurile se racordează cu raza r = 30 mm (SR 1848-2, 6.6).
Corners are rounded with radius r = 30 mm (SR 1848-2, 6.6).

Sursa: SR 1848-1:2024, figura F52.
Source: SR 1848-1:2024, figure F52.

Drawings and details · 2/3

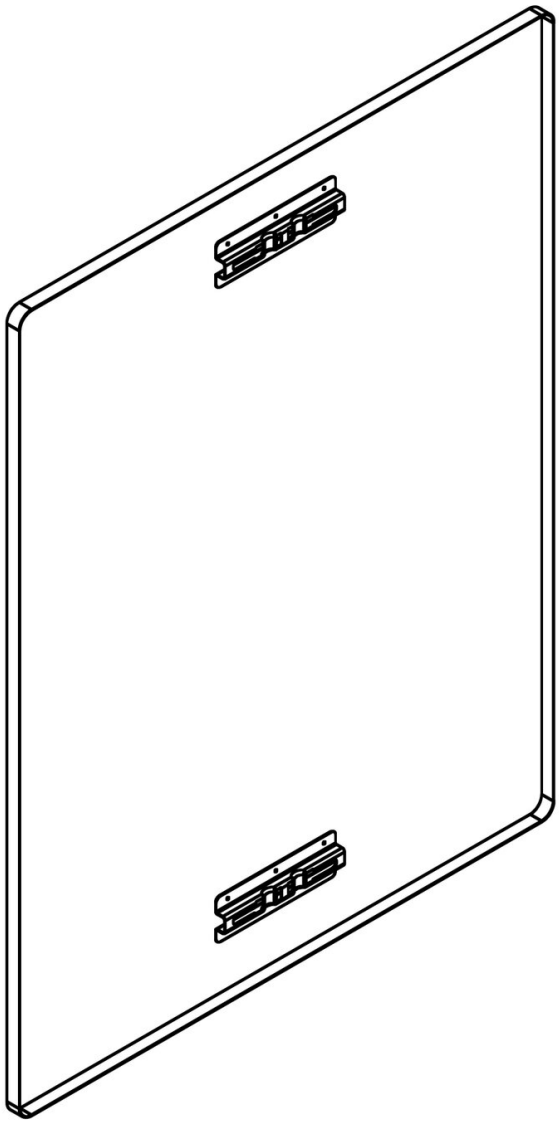

Drawings and details · 3/3

Prindere cu canal și colier, stâlp Ø48 mm

Channel and clamp fixing, Ø48 mm post

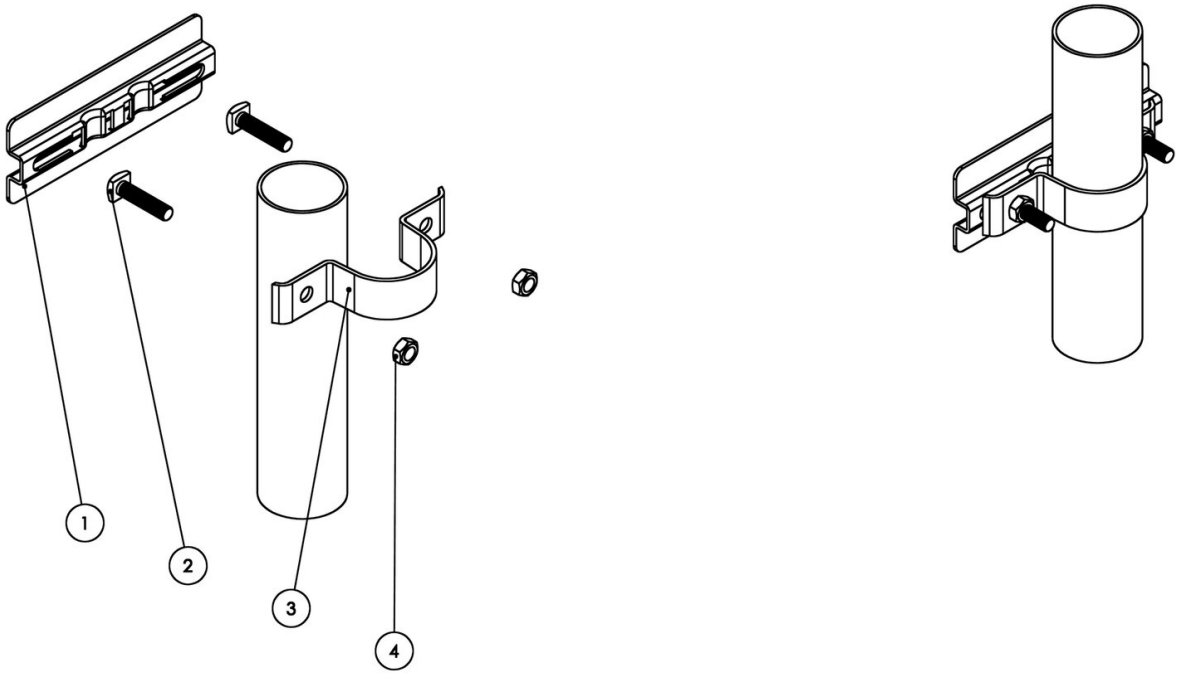

1 Canal de prindere din aluminiu (pe spatele panoului)
Aluminium fixing channel (on the back of the panel)

2 Șurub M8 × 35 cu cap pătrat, zincat (2 buc.)
M8 × 35 square-head bolt, galvanised (2 pcs)

3 Colier Ø48 mm din tablă zincată
Ø48 mm clamp, galvanised steel

4 Piuliță M8 zincată (2 buc.)
M8 nut, galvanised (2 pcs)

Set pentru un punct de prindere. Pentru stâlp Ø60 mm, colierele se livrează la cerere.
Set for one fixing point. Clamps for Ø60 mm posts are available on request.