G11 Information Sign – Police, 50×65 cm, Class II

Signs compliant with SR 1848-1:2024



AT A GLANCE

- Information sign G11 "Police", to SR 1848-1:2024.
- Blue rectangle, 50 × 65 cm, in 1 mm galvanised steel sheet.
- Class II (RA2) prismatic sheeting, guaranteed 10-year service life.
- Fixings included: 2 clamps for Ø48 mm posts and 4 bolts with nuts.
- CE marked; sheeting and paint resistant to UV and weathering.

Product code	**G11_II**
Category	**Metal Road Signs (Class II)**
Weight	**3.2 kg**
Compliance	**Signs compliant with SR 1848-1:2024**

This product on attotrafic.ro
https://attotrafic.ro/en_US/products/g11-politia-50×65-cm-clasa-ii

Technical specifications

SR 1848-1 code	G11
Name in the standard	Police
Type	Information road sign
Shape and colours	Blue rectangle with a white field reading POLITIA
White field	40 × 35 cm
Size	50×65 cm
Material	Galvanised steel sheet, 1 mm
Construction	Rounded corners, pressed edges, no sharp edges
Painting	Electrostatic, UV-resistant paint
Retroreflective sheeting	Class II (RA2), prismatic, UV-resistant

Retroreflection (white, 0.2°/5°)	250 cd/(lx·m²)
Sheeting service life	10 years (SR 1848-2)
Fixings included	2 clamps, 4 bolts with nuts
Post diameter	Ø48 mm (Ø60 mm on request)
Standards	SR EN 12899-1:2007, SR 1848-1:2024, SR 1848-2:2011, SR 1848-3:2011
Marking	CE

Description

The G11 announces a police station: the word POLITIA in black on a white field, inside the blue rectangle. This version has class II prismatic sheeting, which can be seen from far away at night and on lit streets.

Why class II

Class II (RA2) prismatic sheeting returns roughly three to four times more headlight to the driver than class I sheeting, so the sign can be seen from further away at night and stays legible when viewed at an angle. SR 1848-2 requires prismatic class 2 or 3 sheeting in areas with many light sources, such as streets with public lighting, shop windows and advertising, where a class I sign gets lost in the background. Class II sheeting has a guaranteed 10-year service life, against 7 years for class I.

Where it goes, under SR 1848-1:2024

It goes near the police station. When the station is on a side road, a white arrow with the distance above it can be drawn on the blue background below the lettering.

As a general rule, information signs go in the area of the place they indicate. Where needed, they are signed in advance with an identical sign at least 50 m ahead in built-up areas and at least 150 m outside them, with the distance in white at the bottom or on the P1 additional panel.

Technical data

- 50 × 65 cm panel: blue rectangle with a white field reading POLITIA;
- 1 mm galvanised steel sheet, with rounded corners and pressed edges, no sharp edges;
- electrostatically painted with UV-resistant paint;
- class II (RA2) prismatic retroreflective sheeting, resistant to UV and weathering, with a guaranteed 10-year service life;
- fixings included: 2 clamps for Ø48 mm posts and 4 bolts with nuts;
- CE marked; compliant with SR EN 12899-1:2007, SR 1848-1:2024, SR 1848-2:2011 and SR 1848-3:2011.

Mounting and size

Fixings for the post are included: 2 clamps for Ø48 mm posts and 4 bolts with nuts; clamps for Ø60 mm posts are available on request. The bottom edge of the sign goes 1.50–2.50 m above the road or kerb, and the edge nearest the road 0.50–2.0 m from the road platform.

The post is ordered separately. For a fixed installation in a concrete foundation: the galvanised Ø48 mm post, 300 cm. For temporary use, with no foundation: the Ø48 mm tripod post, 120 cm. On concrete or paving, where you cannot dig: the Ø60 mm flange post, 300 cm, bolted down; for it, ask for the Ø60 mm clamps when you order.

SR 1848-2 sets a single size for this sign, with a 50×65 cm size; the class I sheeting version, the same size, is the G11.

Drawings and details · 1/3

G11 – Poliția

Police

50 x 65 cm · dimensiunile feței indicatorului

50 x 65 cm · sign face dimensions

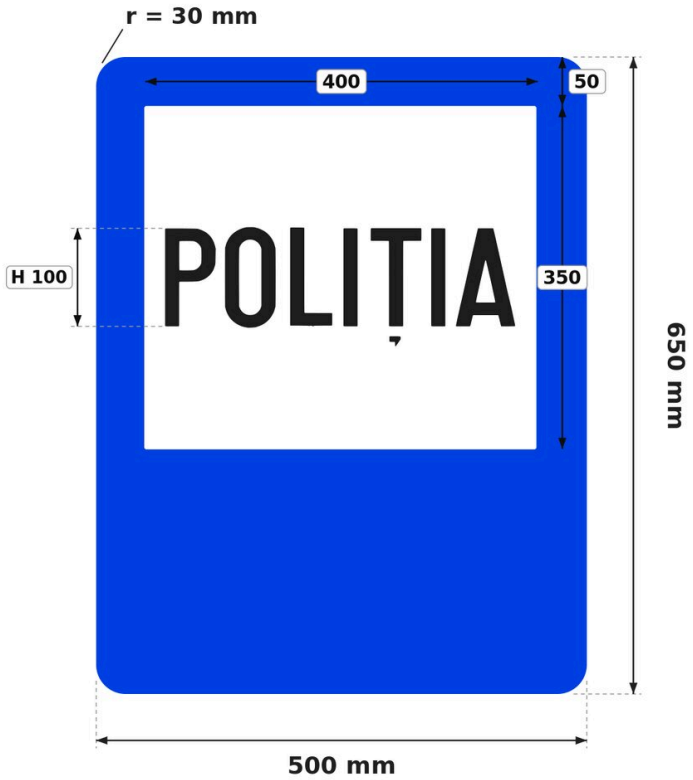

Dimensiuni SR 1848-2 (mm)
SR 1848-2 dimensions (mm)

50 x 65 cm
500 x 650 · r = 30
toate drumurile
all roads

Cotele sunt ale feței retroreflectorizante.
Dimensions of the retroreflective face.
Panoul suport depășește fața cu 5–10 mm (SR 1848-2, 6.1).
The backing panel is 5–10 mm larger than the face (SR 1848-2, 6.1).
Colțurile se racordează cu raza r = 30 mm (SR 1848-2, 6.6).
Corners are rounded with radius r = 30 mm (SR 1848-2, 6.6).
Fond albastru; câmpul alb 400 x 350 mm, la 50 mm de marginea de sus.
Blue background; white field 400 x 350 mm, 50 mm from the top edge.
Scriere tip „îngust” (SR 1848-3); textul ca în figura din SR 1848-1:2024.
Narrow type (SR 1848-3); text as in the SR 1848-1:2024 figure.
„POLIȚIA”: H = 100 mm (tab. 9).
„POLIȚIA”: H = 100 mm (table 9).
Scriere SR 1848-3: tip „îngust”, H = 100 mm.
SR 1848-3 lettering: narrow type, H = 100 mm.
Sursa: SR 1848-2:2011, tab. 9.
Source: SR 1848-2:2011, table 9.

Drawings and details · 2/3

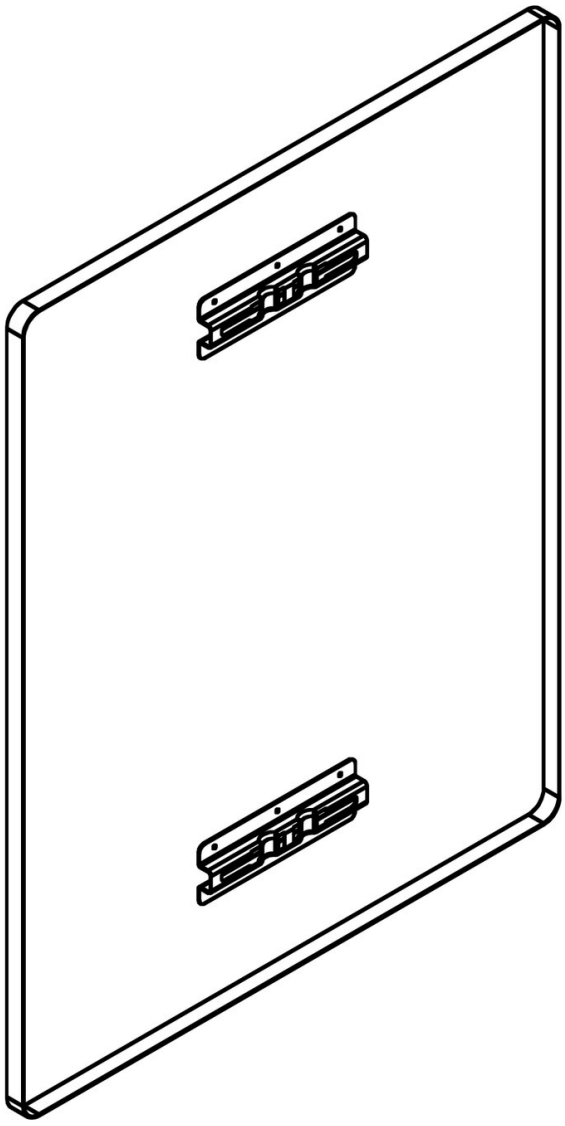

Drawings and details · 3/3

Prindere cu canal și colier, stâlp Ø48 mm

Channel and clamp fixing, Ø48 mm post

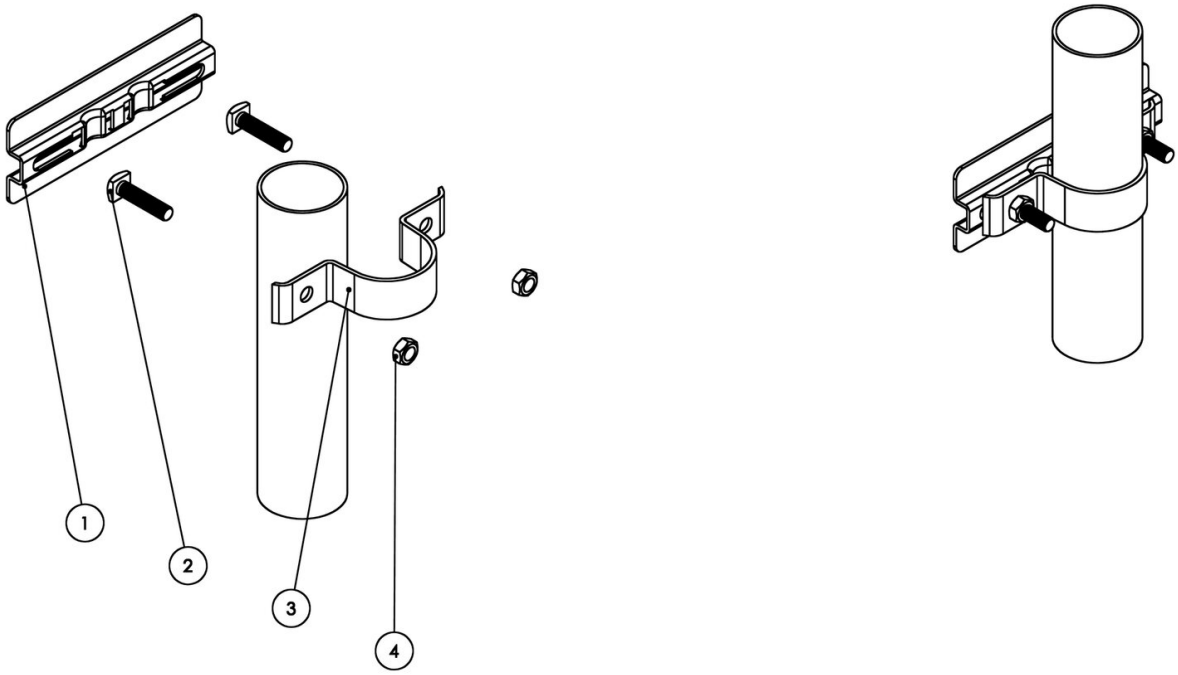

1 Canal de prindere din aluminiu (pe spatele panoului)
Aluminium fixing channel (on the back of the panel)

2 Șurub M8 × 35 cu cap pătrat, zincat (2 buc.)
M8 × 35 square-head bolt, galvanised (2 pcs)

3 Colier Ø48 mm din tablă zincată
Ø48 mm clamp, galvanised steel

4 Piuliță M8 zincată (2 buc.)
M8 nut, galvanised (2 pcs)

Set pentru un punct de prindere. Pentru stâlp Ø60 mm, colierele se livrează la cerere.
Set for one fixing point. Clamps for Ø60 mm posts are available on request.