G62 Information Sign – Tourist Information Point, 60×60 cm, Class I

Class I (EGP) Road Signs | Signs compliant with SR 1848-1:2024



AT A GLANCE

- Information sign G62 "Tourist Information Point", to SR 1848-1:2024.
- Blue square, 60 × 60 cm, in 1 mm galvanised steel sheet.
- Class I retroreflective sheeting, 7-year service life.
- Fixings included: 2 clamps for Ø48 mm posts and 4 bolts with nuts.
- CE marked; sheeting and paint resistant to UV and weathering.

Product code	**G62**
Category	**Metal Road Signs**
Weight	**3 kg**
Compliance	**Class I (EGP) Road Signs**
Compliance	**Signs compliant with SR 1848-1:2024**

This product on attotrafic.ro
https://attotrafic.ro/en_US/products/g62-punct-de-informare-turistica-60×60-cm-clasa-i

Technical specifications

SR 1848-1 code	G62
Name in the standard	Tourist information point
Type	Information road sign
Shape and colours	Blue square with the white letter i
Size	60 × 60 cm
Material	Galvanised steel sheet, 1 mm
Construction	Rounded corners, pressed edges, no sharp edges
Painting	Electrostatic, UV-resistant paint

Retroreflective sheeting	Class I (RA1), UV-resistant
Retroreflection (white, 0.2°/5°)	70 cd/(lx·m²)
Sheeting service life	7 years
Weight	3.2 kg
Fixings included	2 clamps, 4 bolts with nuts
Post diameter	Ø48 mm (Ø60 mm on request)
Standards	SR EN 12899-1:2007, SR 1848-1:2024, SR 1848-2:2011, SR 1848-3:2011
Marking	CE

Description

The G62, the white letter i on a blue square, marks a tourist information point, with maps, tips and information about the area.

When class I is used

Class I means RA1 retroreflective sheeting, with 70 cd/(lx·m²) for white and a 7-year service life. It suits places where the sign does not compete with other lights: roads and streets without strong lighting, local, minor and private roads. In areas with many light sources, such as streets with public lighting, shop windows and advertising, SR 1848-2 requires prismatic class 2 or 3 sheeting, because a class I sign gets lost against the background there.

Where it goes, under SR 1848-1:2024

It goes near a tourist information point. The opening hours can be shown on the P6 additional panel (hours during which the sign applies).

As a general rule, information signs go in the area of the place they indicate. Where needed, they are signed in advance with an identical sign at least 50 m ahead in built-up areas and at least 150 m outside them, with the distance in white at the bottom or on the P1 additional panel.

Technical data

- 60 × 60 cm panel: blue square with the white letter i;
- 1 mm galvanised steel sheet, with rounded corners and pressed edges, no sharp edges;
- electrostatically painted with UV-resistant paint;
- class I retroreflective sheeting (RA1), resistant to UV and weathering, with a 7-year service life;
- weight: 3.2 kg;
- fixings included: 2 clamps for Ø48 mm posts and 4 bolts with nuts;
- CE marked; compliant with SR EN 12899-1:2007, SR 1848-1:2024, SR 1848-2:2011 and SR 1848-3:2011.

Mounting and size

Fixings for the post are included: 2 clamps for Ø48 mm posts and 4 bolts with nuts; clamps for Ø60 mm posts are available on request. The bottom edge of the sign goes 1.50–2.50 m above the road or kerb, and the edge nearest the road 0.50–2.0 m from the road platform. The sign must be visible from at least 50 m in built-up areas and 100 m outside them.

The post is ordered separately. For a fixed installation in a concrete foundation: the galvanised Ø48 mm post, 300 cm. For temporary use, with no foundation: the Ø48 mm tripod post, 120 cm. On concrete or paving, where you cannot dig: the Ø60 mm flange post, 300 cm, bolted down; for it, ask for the Ø60 mm clamps when you order.

The panel measures 60 × 60 cm.

Drawings and details · 1/3

G62 – Punct de informare turistică

Tourist information point

60 x 60 cm · dimensiunile feței indicatorului

60 x 60 cm · sign face dimensions

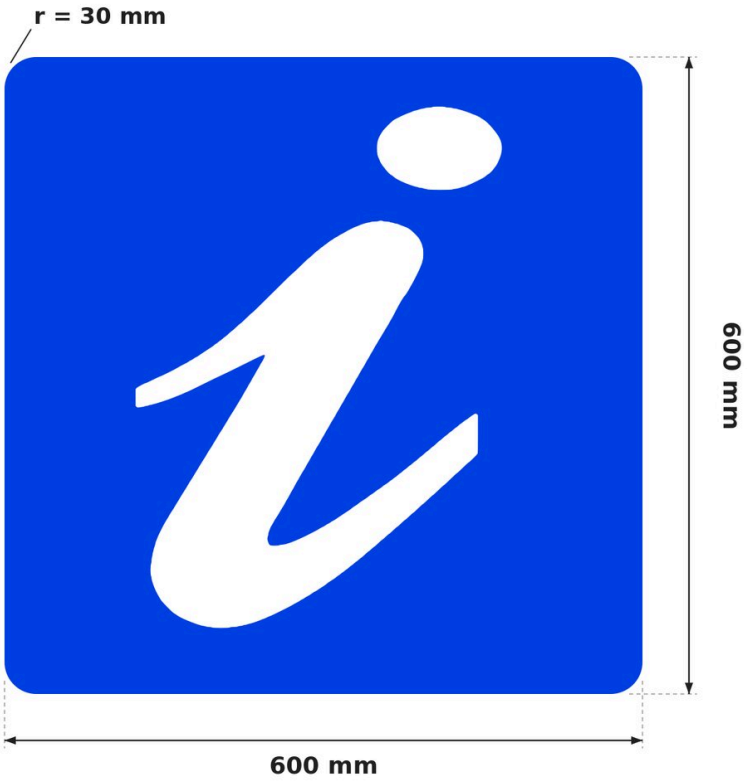

Dimensiuni SR 1848-2 (mm)

SR 1848-2 dimensions (mm)

60 x 60 cm

600 x 600 · r = 30

toate drumurile

all roads

Cotele sunt ale feței retroreflectorizante.

Dimensions of the retroreflective face.

Panoul suport depășește fața cu 5–10 mm (SR 1848-2, 6.1).

The backing panel is 5–10 mm larger than the face (SR 1848-2, 6.1).

Colțurile se racordează cu raza r = 30 mm (SR 1848-2, 6.6).

Corners are rounded with radius r = 30 mm (SR 1848-2, 6.6).

Sursa: SR 1848-2:2011, tab. 8.

Source: SR 1848-2:2011, table 8.

Drawings and details · 2/3

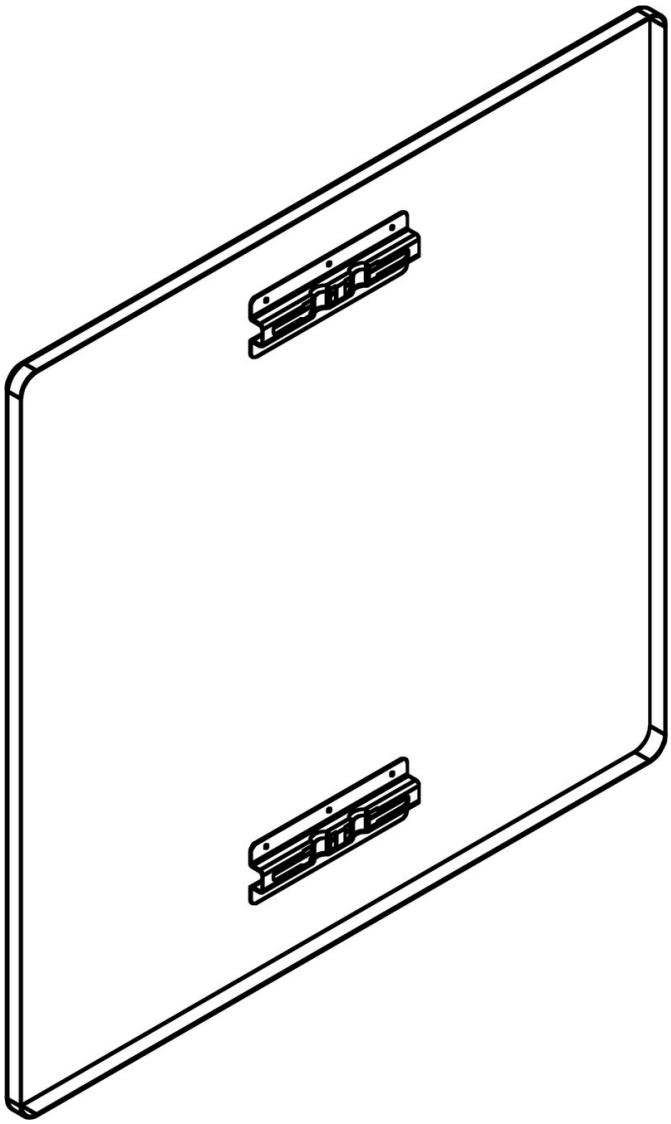

Drawings and details · 3/3

Prindere cu canal și colier, stâlp Ø48 mm

Channel and clamp fixing, Ø48 mm post

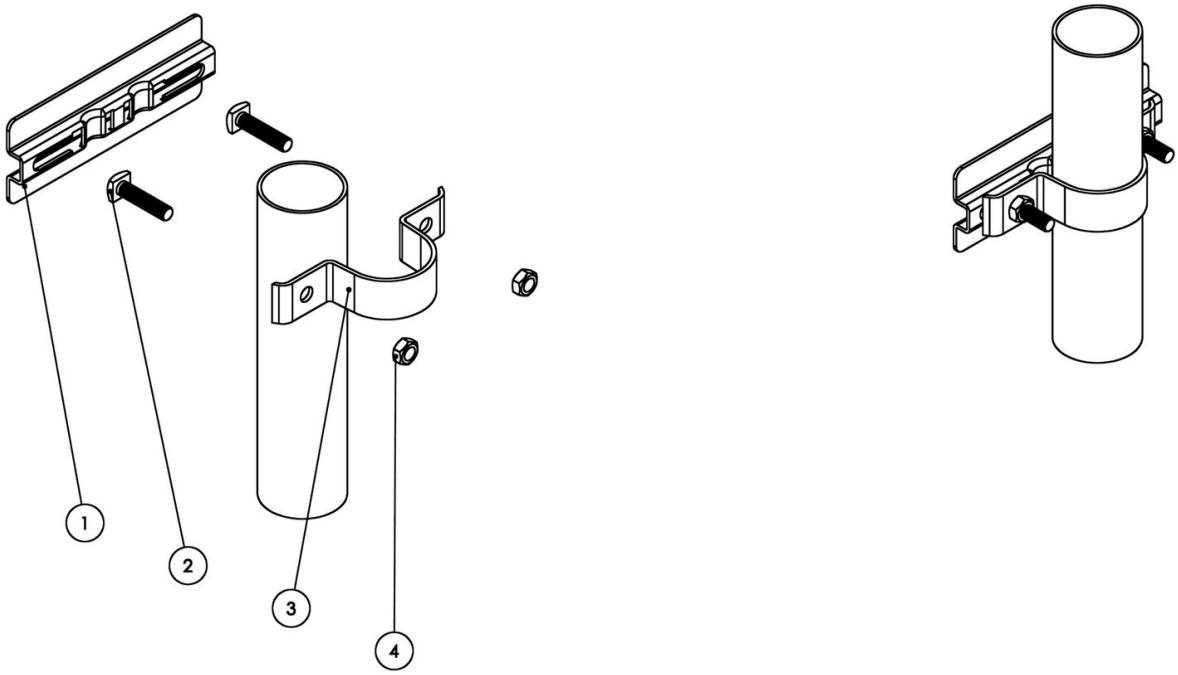

1 Canal de prindere din aluminiu (pe spatele panoului)
Aluminium fixing channel (on the back of the panel)

2 Șurub M8 × 35 cu cap pătrat, zincat (2 buc.)
M8 × 35 square-head bolt, galvanised (2 pcs)

3 Colier Ø48 mm din tablă zincată
Ø48 mm clamp, galvanised steel

4 Piuliță M8 zincată (2 buc.)
M8 nut, galvanised (2 pcs)

Set pentru un punct de prindere. Pentru stâlp Ø60 mm, colierele se livrează la cerere.
Set for one fixing point. Clamps for Ø60 mm posts are available on request.