G73 Information Sign – Road Vignette Required, 50×65 cm, Class I

Class I (EGP) Road Signs | Signs compliant with SR 1848-1:2024



AT A GLANCE

- Information sign G73 "Road Vignette Required", to SR 1848-1:2024.
- Blue rectangle, 50 × 65 cm, in 1 mm galvanised steel sheet.
- Class I retroreflective sheeting, 7-year service life.
- Fixings included: 2 clamps for Ø48 mm posts and 4 bolts with nuts.
- CE marked; sheeting and paint resistant to UV and weathering.

Product code	**G73**
Category	**Metal Road Signs**
Weight	**3.2 kg**
Compliance	**Class I (EGP) Road Signs**
Compliance	**Signs compliant with SR 1848-1:2024**

This product on attotrafic.ro
https://attotrafic.ro/en_US/products/g73-rovinieta-obligatorie-50×65-cm-clasa-i

Technical specifications

SR 1848-1 code	G73
Name in the standard	Road vignette required
Type	Information road sign
Shape and colours	Blue rectangle with a white field (motorway symbol and the word ROVINIETĂ) and the white words OBLIGATORIE and MANDATORY
Size	50 × 65 cm
Material	Galvanised steel sheet, 1 mm
Construction	Rounded corners, pressed edges, no sharp edges
Painting	Electrostatic, UV-resistant paint

Retroreflective sheeting	Class I (RA1), UV-resistant
Retroreflection (white, 0.2°/5°)	70 cd/(lx·m²)
Sheeting service life	7 years
Weight	3.2 kg
Fixings included	2 clamps, 4 bolts with nuts
Post diameter	Ø48 mm (Ø60 mm on request)
Standards	SR EN 12899-1:2007, SR 1848-1:2024, SR 1848-2:2011, SR 1848-3:2011
Marking	CE

Description

The G73 tells drivers that a road vignette is required on the road ahead and goes near the places where one can be bought. The white field carries the motorway symbol and the word ROVINIETĂ; below it, in white on the blue background, OBLIGATORIE and its English translation, MANDATORY, for foreign drivers.

When class I is used

The sign has class I (RA1) retroreflective sheeting: 70 cd/(lx·m²) for white and a 7-year service life. It is the economical choice for places without many light sources, such as local, minor and private roads or streets without strong lighting. Where there is street lighting, shop windows or advertising, SR 1848-2 requires prismatic class 2 or 3 sheeting, which stands out better against a lit background.

Where it goes, under SR 1848-1:2024

It goes on the approach to places where road vignettes can be bought.

The G73 is a new sign, introduced by SR 1848-1:2024. Where the vignette is checked by video cameras, the G74 Video Vignette Check sign is used.

Like all group G information signs, it is rectangular or square; the background is blue on ordinary roads and green on motorways.

Technical data

- 50 × 65 cm panel: blue rectangle with a white field (motorway symbol and the word ROVINIETĂ) and the white words OBLIGATORIE and MANDATORY;
- 1 mm galvanised steel sheet, with rounded corners and pressed edges, no sharp edges;
- electrostatically painted with UV-resistant paint;
- class I retroreflective sheeting (RA1), resistant to UV and weathering, with a 7-year service life;
- weight: 3.2 kg;
- fixings included: 2 clamps for Ø48 mm posts and 4 bolts with nuts;
- CE marked; compliant with SR EN 12899-1:2007, SR 1848-1:2024, SR 1848-2:2011 and SR 1848-3:2011.

Mounting and size

Fixings for the post are included: 2 clamps for Ø48 mm posts and 4 bolts with nuts; clamps for Ø60 mm posts are available on request. The bottom edge of the sign goes 1.50–2.50 m above the road or kerb, and the edge nearest the road 0.50–2.0 m from the road platform. The sign must be visible from at least 50 m in built-up areas and 100 m outside them.

The post is ordered separately. For a fixed installation in a concrete foundation: the galvanised Ø48 mm post, 300 cm. For temporary use, with no foundation: the Ø48 mm tripod post, 120 cm. On concrete or paving, where you cannot dig: the Ø60 mm flange post, 300 cm, bolted down; for it, ask for the Ø60 mm clamps when you order.

The panel measures 50 × 65 cm, the size of the information signs with a white field; SR 1848-2:2011 has no row for the G73 yet.

Drawings and details · 1/3

G73 – Rovinietă obligatorie

Road vignette required

50 x 65 cm · dimensiunile feței indicatorului

50 x 65 cm · sign face dimensions



Dimensiuni (mm) Dimensions (mm)
50 x 65 cm 500 x 650 · r = 30 toate drumurile all roads

Cotele sunt ale feței retroreflectorizante.
Dimensions of the retroreflective face.

Fond albastru; câmpul alb 400 x 350 mm, la 50 mm de marginea de sus.
Blue background; white field 400 x 350 mm, 50 mm from the top edge.

Indicator nou în SR 1848-1:2024, fără rând în SR 1848-2; mărimea ca la celelalte panouri de serviciu (500 x 650).
New in SR 1848-1:2024, no row in SR 1848-2; size as the other service panels (500 x 650).

Înălțimea scrierii nu este dată în SR 1848-2; s-a măsurat pe figura din SR 1848-1:2024.
Letter height not given in SR 1848-2; measured on the SR 1848-1:2024 figure.

Desenat după figura din SR 1848-1:2024.
Drawn from the SR 1848-1:2024 figure.

Panoul suport depășește fața cu 5–10 mm (SR 1848-2, 6.1).
The backing panel is 5–10 mm larger than the face (SR 1848-2, 6.1).

Colțurile se racordează cu raza r = 30 mm (SR 1848-2, 6.6).
Corners are rounded with radius r = 30 mm (SR 1848-2, 6.6).

Scriere SR 1848-3: tip „îngust", H = 65 mm.
SR 1848-3 lettering: narrow type, H = 65 mm.

Sursa: SR 1848-1:2024, figura G73.
Source: SR 1848-1:2024, figure G73.

Drawings and details · 2/3

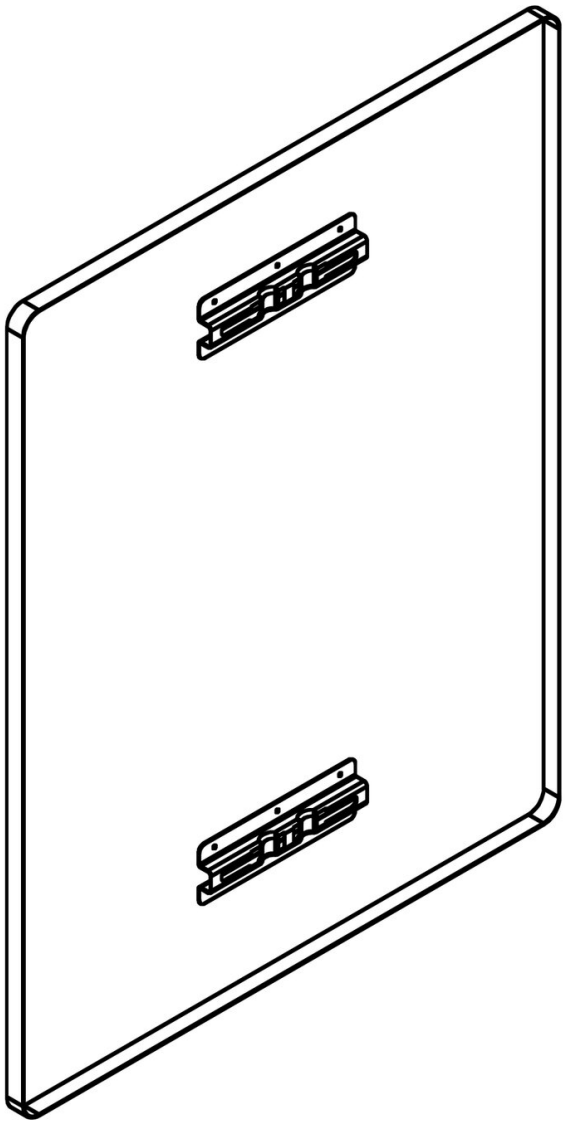

Drawings and details · 3/3

Prindere cu canal și colier, stâlp Ø48 mm

Channel and clamp fixing, Ø48 mm post

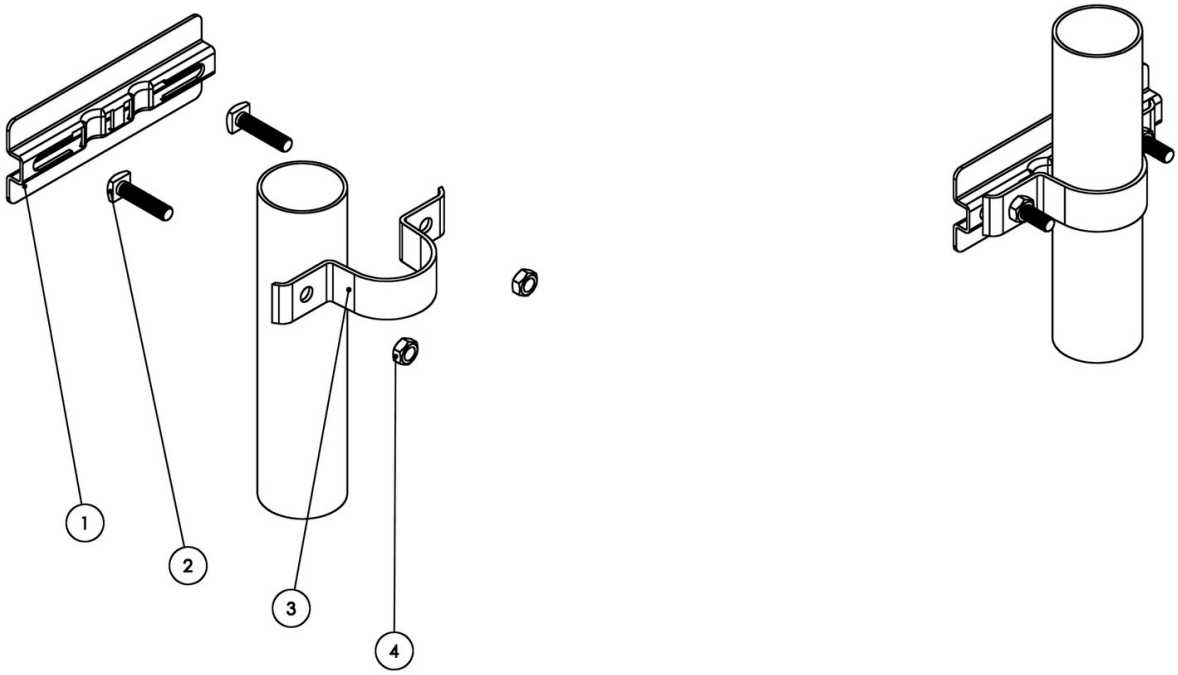

1 Canal de prindere din aluminiu (pe spatele panoului)
Aluminium fixing channel (on the back of the panel)

2 Șurub M8 × 35 cu cap pătrat, zincat (2 buc.)
M8 × 35 square-head bolt, galvanised (2 pcs)

3 Colier Ø48 mm din tablă zincată
Ø48 mm clamp, galvanised steel

4 Piuliță M8 zincată (2 buc.)
M8 nut, galvanised (2 pcs)

Set pentru un punct de prindere. Pentru stâlp Ø60 mm, colierele se livrează la cerere.
Set for one fixing point. Clamps for Ø60 mm posts are available on request.