A33 Warning Sign – Junction with Minor Roads on Both Sides, 90 cm, Class II

Signs compliant with SR 1848-1:2024

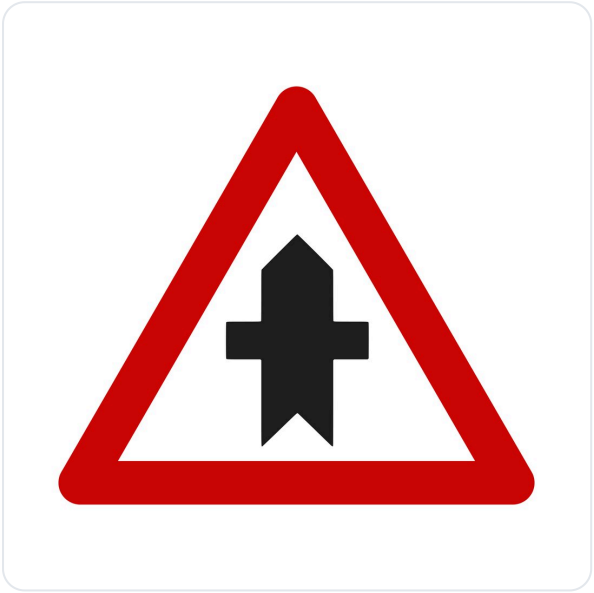

AT A GLANCE

- Warning sign A33 "Junction with a minor road", to SR 1848-1:2024.
- 90 cm triangle in 1 mm galvanised steel sheet.
- Class II (RA2) prismatic sheeting, guaranteed 10-year service life.
- Fixings included: 2 clamps for Ø48 mm posts and 4 bolts with nuts.
- CE marked; sheeting and paint resistant to UV and weathering.

Product code	**A33_II**
Category	**Metal Road Signs (Class II)**
Weight	**5 kg**
Compliance	**Signs compliant with SR 1848-1:2024**

This product on attotrafic.ro
https://attotrafic.ro/en_US/products/indicator-a33-intersectie-cu-un-drum-fara-prioritate-din-ambele-parti-90-cm-clasa-ii

Technical specifications

SR 1848-1 code	A33
Name in the standard	Junction with a minor road
Type	Warning road sign
Shape and colours	Equilateral triangle, red border, white background, black symbol
Size	90 cm
Format (SR 1848-2)	Large
Material	Galvanised steel sheet, 1 mm
Construction	Rounded corners, pressed edges, no sharp edges
Painting	Electrostatic, UV-resistant paint

Retroreflective sheeting	Class II (RA2), prismatic, UV-resistant
Retroreflection (white, 0.2°/5°)	250 cd/(lx·m²)
Sheeting service life	10 years (SR 1848-2)
Fixings included	2 clamps, 4 bolts with nuts
Post diameter	Ø48 mm (Ø60 mm on request)
Standards	SR EN 12899-1:2007, SR 1848-1:2024, SR 1848-2:2011, SR 1848-3:2011
Marking	CE

Description

The A33 announces a junction where your road has priority and side roads join from both sides. The thick line is the priority road, the thin ones are the roads that must give way. The triangle is 90 cm, the large format in SR 1848-2, and the class II prismatic sheeting makes it visible from far away at night.

Why class II

Class II (RA2) prismatic sheeting returns roughly three to four times more headlight to the driver than class I sheeting, so the sign can be seen from further away at night and stays legible when viewed at an angle. SR 1848-2 requires prismatic class 2 or 3 sheeting in areas with many light sources, such as streets with public lighting, shop windows and advertising, where a class I sign gets lost in the background. Class II sheeting has a guaranteed 10-year service life, against 7 years for class I.

Where it goes, under SR 1848-1:2024

It goes outside built-up areas, on the approach to a junction with a minor road, if the junction is not already signed with advance direction signs F1, F1a, F2 or F13. It is not used at junctions with dirt roads. The minor roads must have the B1 “Give way” or the B2 “Stop” sign. The symbol shows the layout: here, side roads on both sides.

The distance from the hazard follows the general rule for warning signs: up to 50 m in built-up areas, 100–250 m outside them and 500–1,000 m on motorways and expressways. On motorways and expressways the P4 additional panel with the actual distance is mandatory; elsewhere it is only added when the sign has to stand further back.

Technical data

- equilateral triangle with a 90 cm side (large format, SR 1848-2), red border, white background, black symbol;
- 1 mm galvanised steel sheet, with rounded corners and pressed edges, no sharp edges;
- electrostatically painted with UV-resistant paint;
- class II (RA2) prismatic retroreflective sheeting, resistant to UV and weathering, with a guaranteed 10-year service life;
- fixings included: 2 clamps for Ø48 mm posts and 4 bolts with nuts;
- CE marked; compliant with SR EN 12899-1:2007, SR 1848-1:2024, SR 1848-2:2011 and SR 1848-3:2011.

Mounting and size

Fixings for the post are included: 2 clamps for Ø48 mm posts and 4 bolts with nuts; clamps for Ø60 mm posts are available on request. The bottom edge of the sign goes 1.50–2.50 m above the road or kerb, and the edge nearest the road 0.50–2.0 m from the road platform.

The post is ordered separately. For a fixed installation in a concrete foundation: the galvanised Ø48 mm post, 300 cm. For temporary use, with no foundation: the Ø48 mm tripod post, 120 cm. On concrete or paving, where you cannot dig: the Ø60 mm flange post, 300 cm, bolted down; for it, ask for the Ø60 mm clamps when you order.

The 90 cm triangle is the large format in SR 1848-2, required on national roads; the normal 70 cm format is for county and local roads, streets and private roads open to public traffic. The 70 cm version with class I sheeting is the A33.

Drawings and details · 1/3

A33 – Intersecție cu un drum fără prioritate

Junction with a minor road

90 cm · dimensiunile feței indicatorului
90 cm · sign face dimensions

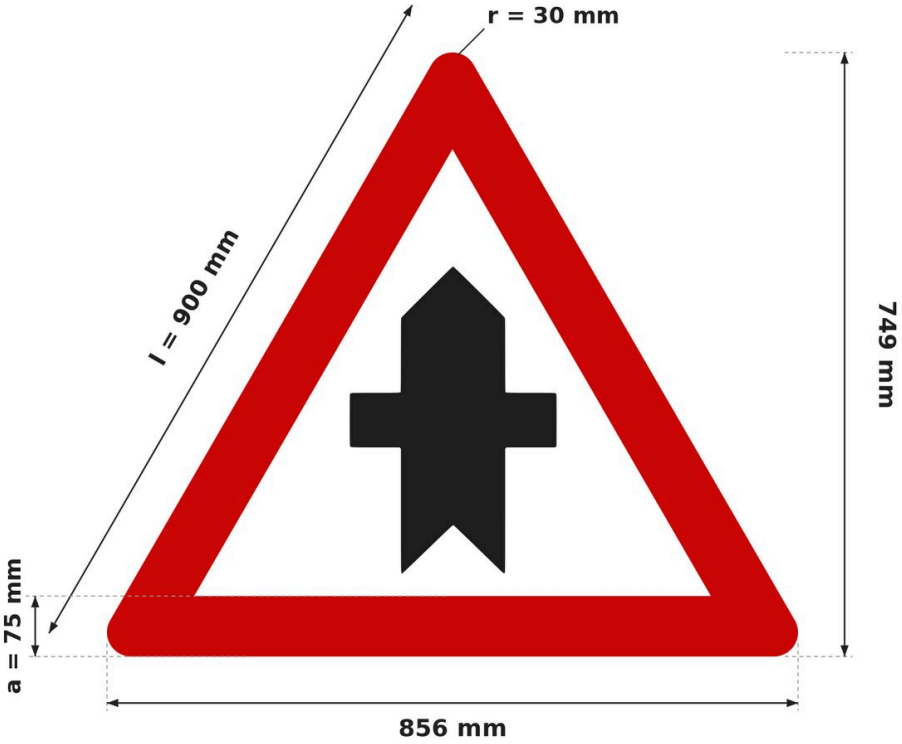

Dimensiuni SR 1848-2 (mm)
SR 1848-2 dimensions (mm)

60 cm
l = 600 · a = 50 · r = 15
drumuri vicinale cu trafic redus
low-traffic local access roads

70 cm
l = 700 · a = 60 · r = 30
drumuri județene, comunale, străzi
county and communal roads, streets

90 cm
l = 900 · a = 75 · r = 30
drumuri naționale
national roads

120 cm
l = 1200 · a = 100 · r = 30
autostrăzi
motorways

Fond alb, chenar roșu; cotele sunt ale feței retroreflectorizante.
White background, red border; dimensions of the retroreflective face.

Panoul suport depășește fața cu 5–10 mm (SR 1848-2, 6.1).
The backing panel is 5–10 mm larger than the face (SR 1848-2, 6.1).

l = latura triunghiului cu colțuri ascuțite; colțurile se racordează cu raza r.
l = side of the sharp-cornered triangle; corners are rounded with radius r.

Formatul se alege după categoria drumului (SR 1848-2, 5.2); colțuri r = 15 mm la formatul mic, r = 30 mm la celelalte.
The format follows the road category (SR 1848-2, 5.2); corners r = 15 mm on the small format, r = 30 mm on the others.

Sursa: SR 1848-2:2011, tab. 2.
Source: SR 1848-2:2011, table 2.

Drawings and details · 2/3

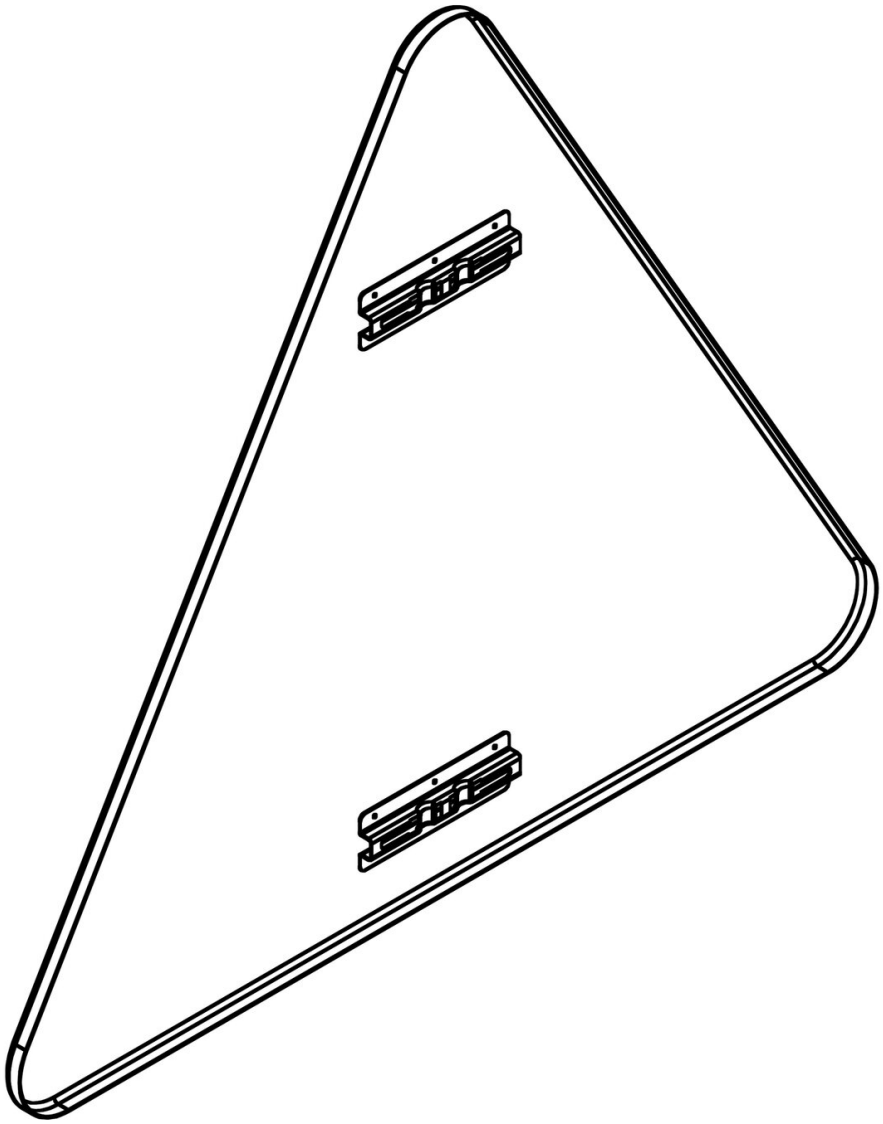

Drawings and details · 3/3

Prindere cu canal și colier, stâlp Ø48 mm

Channel and clamp fixing, Ø48 mm post

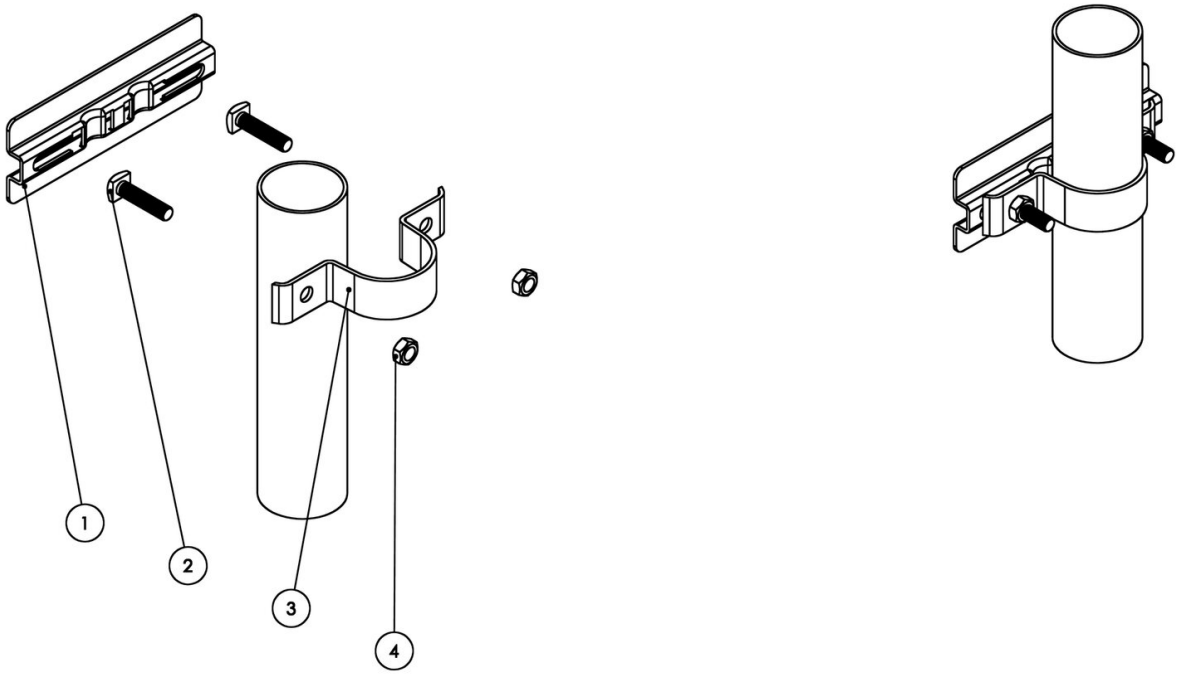

1 Canal de prindere din aluminiu (pe spatele panoului)
Aluminium fixing channel (on the back of the panel)

2 Șurub M8 × 35 cu cap pătrat, zincat (2 buc.)
M8 × 35 square-head bolt, galvanised (2 pcs)

3 Colier Ø48 mm din tablă zincată
Ø48 mm clamp, galvanised steel

4 Piuliță M8 zincată (2 buc.)
M8 nut, galvanised (2 pcs)

Set pentru un punct de prindere. Pentru stâlp Ø60 mm, colierele se livrează la cerere.
Set for one fixing point. Clamps for Ø60 mm posts are available on request.