U38 Temporary Sign – Works in the Middle Lane, 65×85 cm, Class I

Class I (EGP) Road Signs | Signs compliant with SR 1848-1:2024

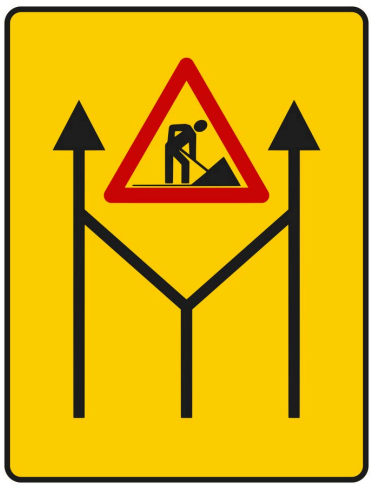

AT A GLANCE

- Temporary road sign U38 “Works in the middle lane”, to SR 1848-1:2024.
- 65×85 cm yellow panel with a black border, in 1 mm galvanised steel sheet.
- Class I (RA1) retroreflective sheeting, 7-year service life.
- Fixings included: 2 clamps for Ø48 mm posts and 4 bolts with nuts.

Product code	**U38**
Category	**Metal Road Signs**
Weight	**5 kg**
Compliance	**Class I (EGP) Road Signs**
Compliance	**Signs compliant with SR 1848-1:2024**

This product on attotrafic.ro
https://attotrafic.ro/en_US/products/u38-lucrari-pe-banda-din-mijloc-65×85-cm-clasa-i

Technical specifications

SR 1848-1 code	U38
Name in the standard	Works in the middle lane
Type	Temporary road sign
Shape and colours	65×85 cm yellow panel with a black border, the works triangle and the middle lane splitting towards the side lanes
Size	65×85 cm
Material	Galvanised steel sheet, 1 mm
Construction	Rounded corners, pressed edges, no sharp edges
Painting	Electrostatic

Retroreflective sheeting	Class I (RA1)
Retroreflection (white, 0.2°/5°)	70 cd/(lx·m²)
Sheeting service life	7 years (SR 1848-2)
Fixings included	2 clamps, 4 bolts with nuts
Post diameter	Ø48 mm (Ø60 mm on request)
Standards	SR EN 12899-1:2007, SR 1848-1:2024, SR 1848-2:2011, SR 1848-3:2011

Description

The 65×85 cm yellow panel with a black border announcing work in the middle lane of a road with three lanes per direction, with class I retroreflective sheeting. Below the works triangle the middle lane line splits to the left and to the right, and the black arrows show that traffic carries on in the side lanes.

When class I is used

The class I version is the economical choice for work sites on local roads: RA1 retroreflective sheeting with a 7-year service life. The SR 1848-2 rule is simple: a temporary sign must have at least the class of the existing signing on the section, and areas with many light sources call for prismatic class 2 or 3 sheeting.

Where it goes, under SR 1848-1:2024

It goes on road sections with three lanes per direction where work is being done in the middle lane. SR 1848-1:2024 sets no specific distance for this sign: it is installed under the technical regulations in force for signing roadworks, following the signing layout of the works. Like any sign, it normally goes on the right-hand side of the direction of travel, so that it can be seen from at least 50 m in built-up areas and at least 100 m outside them (SR 1848-2).

What the roadworks rules require (Order 1112/411/2000)

The sign belongs to the advance signing, which is installed first, ahead of the work zone in the direction of travel, with at least 50 cm of clear space outside the carriageway. The rules require signs to be stood on the ground first, to check that they are clearly visible, and only then fixed to a support; no more than two signs go on the same support or side by side, and on one-way roads or bends they can be repeated on the left side or above the road.

On public roads, works are signed under the methodological rules approved by Order MI/MT no. 1112/411/2000. The road closure or traffic restriction is approved by the road authority, with the traffic police's agreement, on the basis of a signing layout endorsed as final, a copy of which the contractor keeps at the work site. The contractor installs, completes and maintains the signing for the whole job, removes it at the end and restores the original signing; accidents caused by incomplete or missing temporary signing are entirely the contractor's responsibility.

At night, if the existing signing on the road is retroreflective, the temporary signing must be retroreflective too and can be supplemented with flashing or sequential (“cascade”) amber lamps; on main and connecting streets in towns, retroreflective temporary signs are supplemented with flashing amber lamps.

Technical data

- 65×85 cm yellow panel with a black border, the works triangle and the middle lane splitting towards the side lanes;
- 1 mm galvanised steel sheet, with rounded corners and pressed edges, no sharp edges;
- electrostatically painted;
- class I retroreflective sheeting (RA1), with a 7-year service life;
- fixings included: 2 clamps for Ø48 mm posts and 4 bolts with nuts;
- compliant with SR EN 12899-1:2007, SR 1848-1:2024, SR 1848-2:2011 and SR 1848-3:2011.

Mounting and size

Fixings for the post are included: 2 clamps for Ø48 mm posts and 4 bolts with nuts; clamps for Ø60 mm posts are available on request. The bottom edge of the sign goes 1.50–2.50 m above the road or kerb, and the edge nearest the road 0.50–2.0 m from the road platform.

The U38 is a new sign, introduced by SR 1848-1:2024, and SR 1848-2:2011 has no size for it yet. The panel is 65×85 cm, the size of the rectangular temporary signs for streets and other roads; for the other temporary signs SR 1848-2 calls for 80×120 cm on national roads and 120×180 cm on motorways.

Drawings and details · 1/3

U38 – Lucrări pe banda din mijloc

Works in the middle lane

65 x 85 cm · dimensiunile feței indicatorului

65 x 85 cm · sign face dimensions

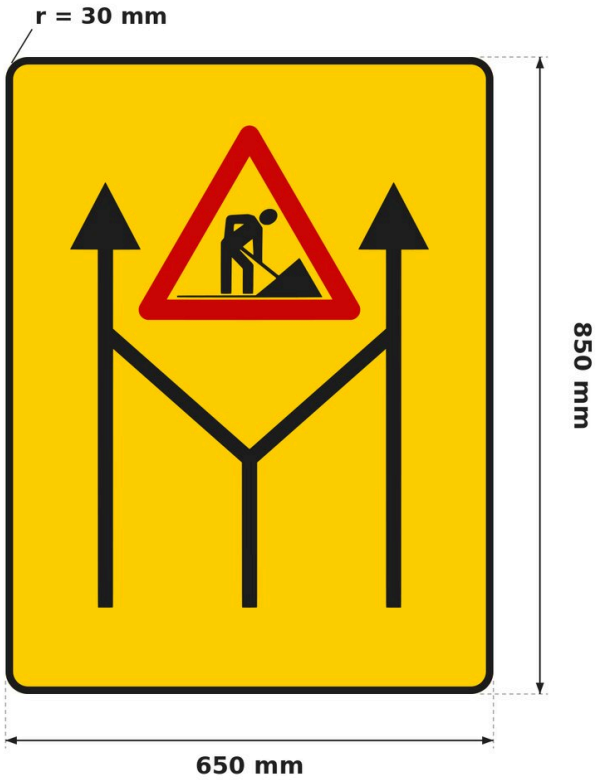

Dimensiuni (mm) Dimensions (mm)
65 x 85 cm 650 x 850 · r = 30 străzi și alte drumuri streets and other roads

Indicator temporar: fond galben, chenar negru; cotele sunt ale feței retroreflectorizante.
Temporary sign: yellow background, black border; dimensions of the retroreflective face.

Indicator nou în SR 1848-1:2024, fără rând în SR 1848-2; mărimea ca la formatul 65 x 85 al indicatoarelor temporare dreptunghiulare.
New in SR 1848-1:2024, no row in SR 1848-2; size as the 65 x 85 format of the rectangular temporary signs.

Desenat după figura din SR 1848-1:2024 (650 x 809); simbolurile nu sunt deformate, doar liniile urmează înălțimea de 850 mm.
Drawn from the SR 1848-1:2024 figure (650 x 809); symbols are not distorted, only the lines follow the 850 mm height.

Triunghiul „Lucrări” ca indicatorul U8, latura 315 mm (măsurată pe figură).
The works triangle as the U8 sign, 315 mm side (measured on the figure).

Panoul suport depășește fața cu 5–10 mm (SR 1848-2, 6.1).
The backing panel is 5–10 mm larger than the face (SR 1848-2, 6.1).

Colțurile se racordează cu raza r = 30 mm (SR 1848-2, 6.6).
Corners are rounded with radius r = 30 mm (SR 1848-2, 6.6).

Sursa: SR 1848-1:2024, figura U38.
Source: SR 1848-1:2024, figure U38.

Drawings and details · 2/3

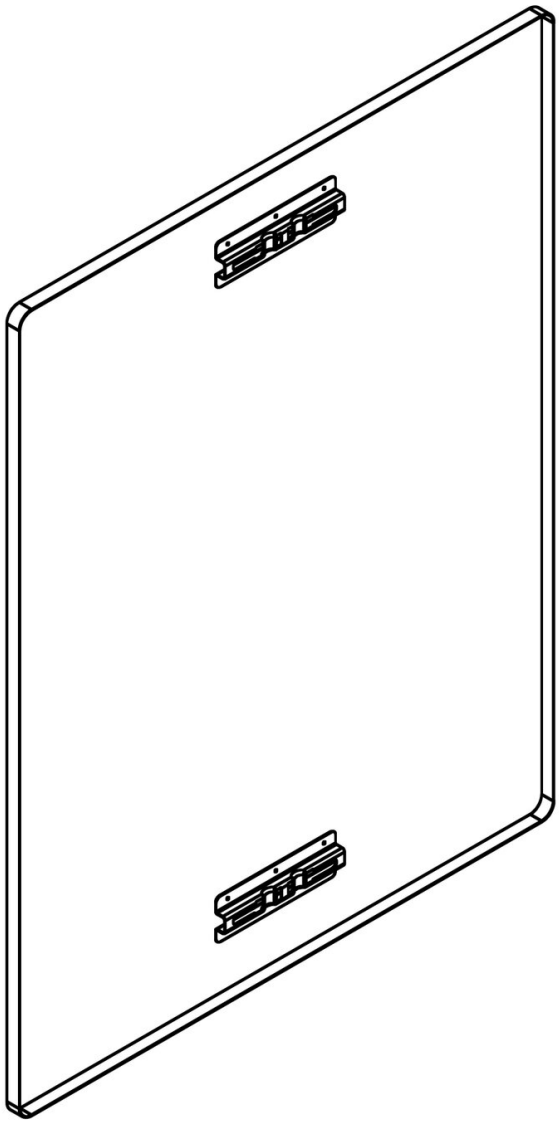

Drawings and details · 3/3

Prindere cu canal și colier, stâlp Ø48 mm

Channel and clamp fixing, Ø48 mm post

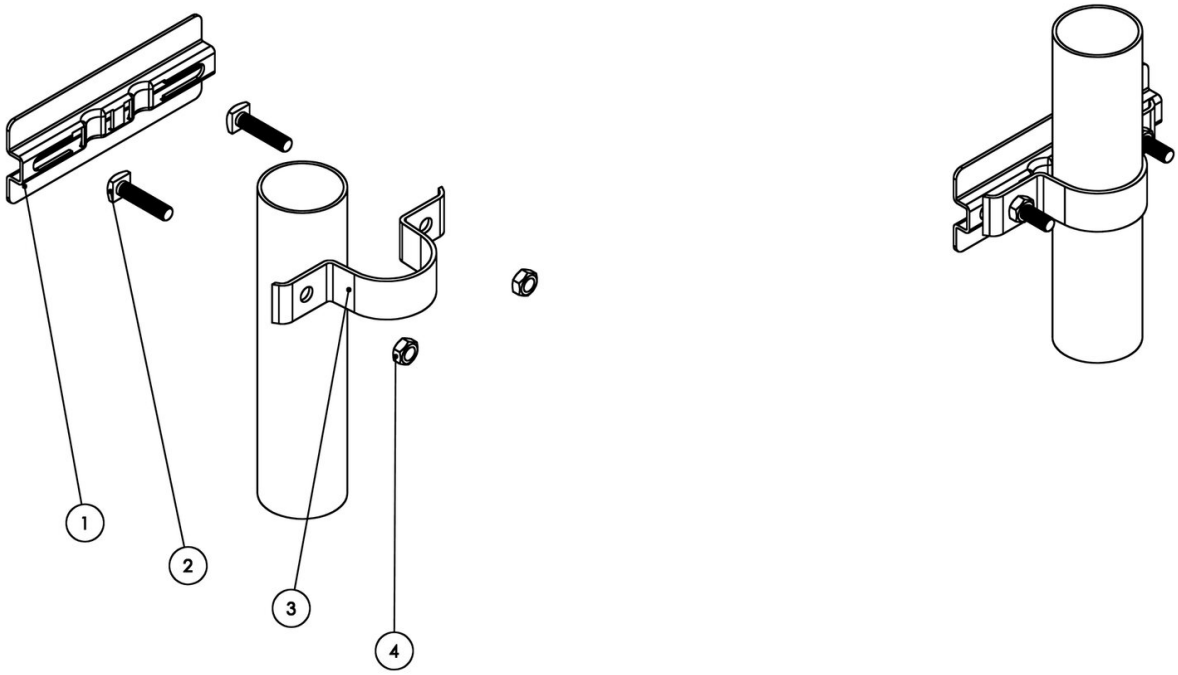

1 Canal de prindere din aluminiu (pe spatele panoului)
Aluminium fixing channel (on the back of the panel)

2 Șurub M8 × 35 cu cap pătrat, zincat (2 buc.)
M8 × 35 square-head bolt, galvanised (2 pcs)

3 Colier Ø48 mm din tablă zincată
Ø48 mm clamp, galvanised steel

4 Piuliță M8 zincată (2 buc.)
M8 nut, galvanised (2 pcs)

Set pentru un punct de prindere. Pentru stâlp Ø60 mm, colierele se livrează la cerere.
Set for one fixing point. Clamps for Ø60 mm posts are available on request.